(*) ITEMS ALREADY PACKED ACCO[illegible] BASIC OR SUBSEQUENT REVISIONS OF THIS TPO DO NOT REQUIRE REP[illegible]NG. (NOTE: CONSULT YOUR OU13 631M MICROFICHE FILE TO DETERMINE LATEST TPO IN EFFECT)

(*) TPO 00-427-9099

REDRAWN FROM EGLIN DRAWING - DL763530-10

SEE NOTES ON PAGE 3

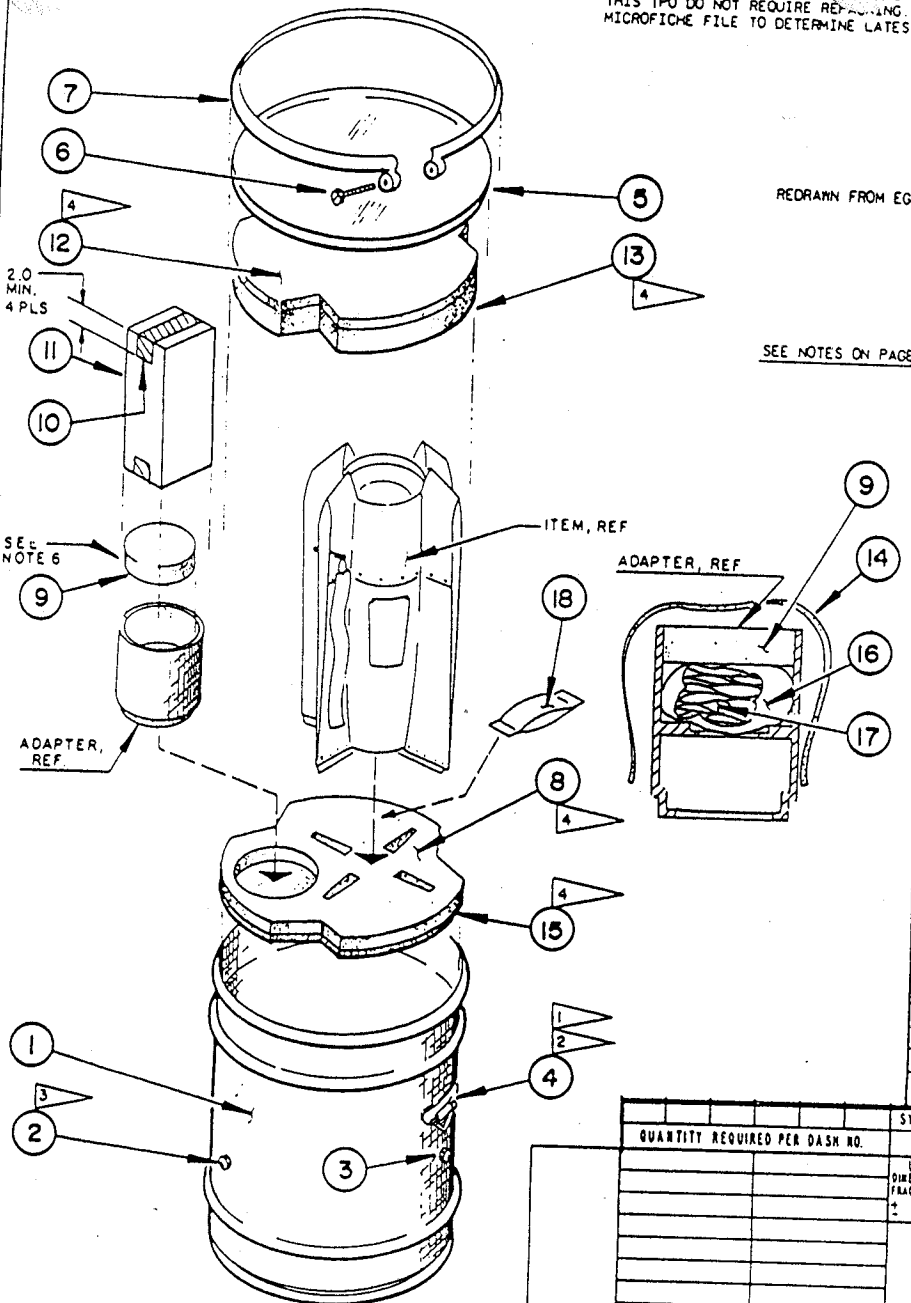

	LTR	DESCRIPTION	DATE	APPROVED
REV	A	ADDED ITEM 20. CHGD DETAIL AND		
		DIMENSIONS OF ITEMS -9, -13 & -15		
		CHGD LOCATION OF SMALL HARDWARE		
REV	B	CHANGED WEIGHT	80133	
REV	C	CHGD REF -8, -15, -12 & -13. CHGD SIZE	81120	
		OF REF -11 & -14. ADDED FLAG NOTE 4.		
REV	D	CHGD "TYPE" OF REF -8, -13 & -15.	81167	
		ADDED TOLERANCES		
REV	F	ADDED 2 DRUM PALLETIZATION, PG 6 OF 6	82215	
REV	G	CORRECTED PALLETIZATION	85084	
			91171	

REVISIONS

PRESERVATION & PACKAGING
LEVEL A IN A/W MIL-P-116 METHOD IID
LEVEL B IN A/W MIL-P-116 METHOD IID
LEVEL C
CLEANING & DRYING IN A/W MIL-P-116
PRESERVATION COMPOUND N/A
AMOUNT OF DESICCANT (units) 12
CLOSURE OR STRAPPING IN A/W MIL-D-6054
MARKING IN A/W MIL-STD-129
SPECIAL MARKING - APPLICABLE SEE INSTRUCTIONS / NOT APPLICABLE
INSTRUCTIONS

REF	QTY	DESCRIPTION	SIZE	MATERIAL	SPECIFICATION
-17	5	BAG ACCESSORIES	SEE INSTRUCTIONS	BARRIER, G.C. TYPE I, STYLE I	MIL-B-117
-16	1	CUSHION	12 X 12	PLASTIC 1/4 INCH OR EQUAL	PPP-C-1797
-15	1	CUSHION, BOTTOM	SEE DETAIL	POLYETHYLENE TYPE V CL 2	PPP-C-1752
-14	1	CUSHIONING, PROTECTOR	6 X 17	PLASTIC 1/4 INCH THICK OR EQUAL	PPP-C-1797
-13	1	CUSHION, TOP	SEE DETAIL	TYPE I	
-12	1	CUSHION, TOP	SEE DETAIL	POLYETHYLENE TYPE V CL 2	PPP-C-1752
-11	1	BOX	16 1/4 X 8 X 8	FIBERBOARD RSC CF DOM Sn 125	PPP-B-636
-10	A/R	TAPE	2 INCH WIDE	PRESSURE SENSITIVE	PPP-T-76 OR EQUAL
-9	1	CUSHION, ADAPTER	7.375 DIA X 2.12 ±.06	TYPE I CL 2	
-8	1	CUSHION, BOTTOM	SEE DETAIL	POLYETHYLENE TYPE I CL 2	PPP-C-1752
-7	1	RING, LOCKING	SEE DETAIL	STEEL	MIL-D-6054
-6	1	BOLT AND NUT	SEE DETAIL	MS-27683	MIL-D-6054
-5	1	COVER	SEE DETAIL	STEEL	MIL-D-6054
-4	2	HANDLE ASSY	SEE DETAIL	STEEL	PER DETAIL
-3	1	HUMIDITY INDICATOR	SEE DETAIL	VARIOUS, TYPE II	MIL-I-26860
-2	1	VALVE, PRESSURE RELIEF	SEE DETAIL	VARIOUS, TYPE III CL 2	MIL-V-27166
-1	1	DRUM	24 DIA X 30-3/4 + 1/8	METAL	MS27683-17

LIST OF MATERIALS

EXTERIOR CONTAINER LEVEL	SPECIFICATION	SIZE I.D.	STYLE	TYPE	CLASS	VARIETY	GRADE	GROSS WT	GROSS CU
A	MIL-D-6054	24 DIA X 30-3/4 + 1/8						153.8	12.23
B	MIL-D-6054	24 DIA X 30-3/4 + 1/8						153.8	12.23
C									
AIR									

NET WT 95.0 OUTSIDE DIMENSIONS 25 1/2 DIA X 32 1/2

PARTS LIST

QUANTITY REQUIRED PER DASH NO.	SYM	NOMENCLATURE	CODE IDENT	IDENTIFYING NO	MATERIAL / SPECIFICATION	UNIT WT	ZONE	FIND NO

UNLESS OTHERWISE SPECIFIED DIMENSIONS ARE IN INCHES — TOLERANCES ON: FRACTIONS ± 1/1 1/1 ± DECIMALS 12 ANGLES ± 2°

DR DATE
CHK
ENG J. A. Dennis 80077
AIR FORCE AUTHENTICATION
AIR FORCE RELEASE K. Henry 80077

U.S. AIR FORCE
OGDEN ALC HILL AFB UTAH

TITLE AIRFOIL GROUP MXU-650/B

SIZE C | AIR FORCE CODE IDENT NO | DRAWING NO TPO 00-427-9099

SCALE 3.25 | SHEET 1 of 6

CURRENT CODE IDENT NO. | NEXT ASSEMBLY | USED ON
APPLICATION

ENGINEERING DRAWING LAYOUT C

AF FORM 1654 PREVIOUS EDITION WILL BE USED

Attachment 1 to 1 of 6

TPO 00-427-9099

REVISIONS

ZONE	LTR	DESCRIPTION	DATE	APPROVED

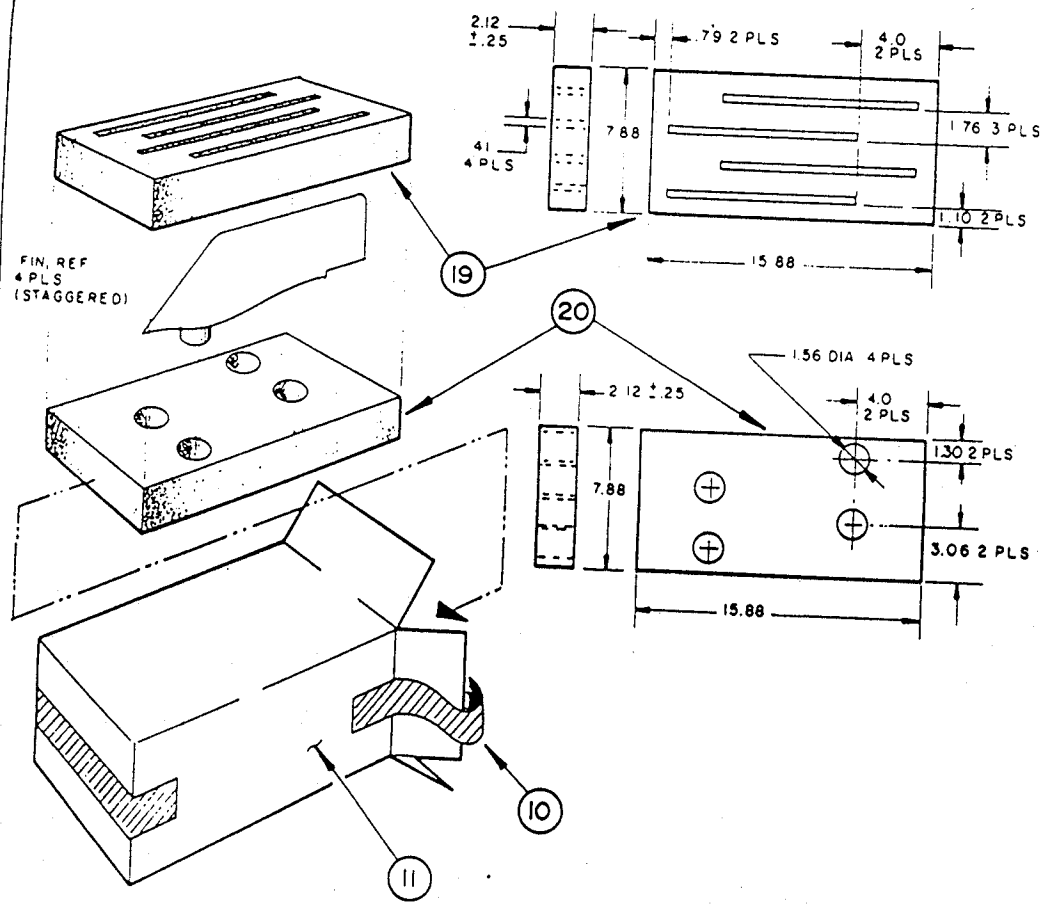

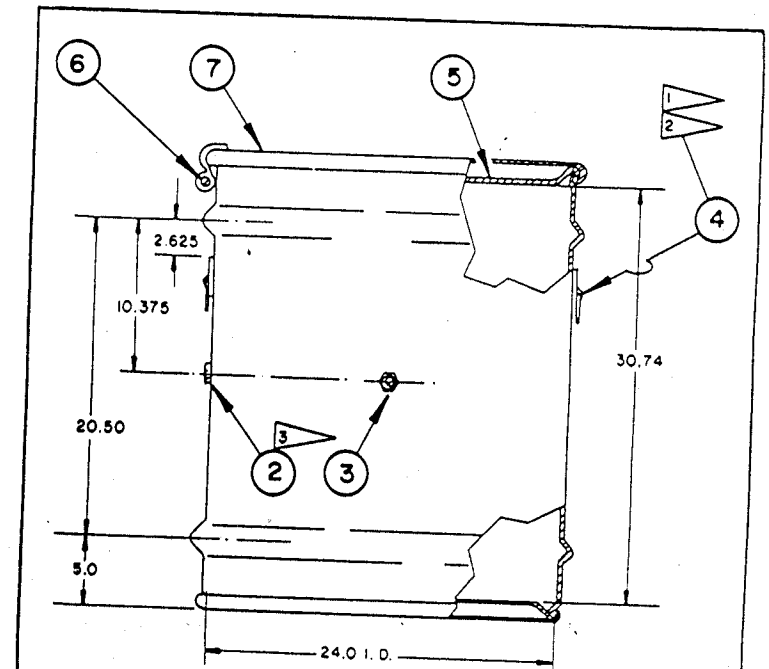

DETAIL OF -1 DRUM

REF	QTY	DESCRIPTION	SIZE	MATERIAL	SPECIFICATION
-20	1				
-19	1	CUSHIONS, FIN	SEE DETAIL	POLYETHYLENE TYPE I CL 2	PPP-C-1752
-18	12	DESICCANT	12 UNITS	DESICCANT TYPE I	MIL-D-3464

QTY REQD	SYM	NOMENCLATURE	CODE IDENT	IDENTIFYING NO.	SPECIFICATION	MATERIAL	UNIT WT	ZONE	FIND NO

LIST OF MATERIALS

NEXT ASSY	USED ON	NEXT ASSY	FINAL ASSY
APPLICATION		QTY REQD	

UNLESS OTHERWISE SPECIFIED DIMENSIONS ARE IN INCHES
TOLERANCES ON
FRACTIONS ± DECIMALS .XX ± .XXX ± ANGLES ±
MATERIAL

DRAFTSMAN SBC
CHECKER
ENGINEER
A.F. PROJ. ENGR
CONTRACT NUMBER
A.F. DESIGN ACTIVITY AUTHENTICATION

U.S. AIR FORCE
OGDEN ALC HILL AFB UTAH

TITLE
AIRFOIL GROUP, MXU-650/B

SIZE C | A.F. CODE IDENT NO | DRAWING NUMBER TPO 00-427-9099

SCALE N/A | 1325 | SHEET 2 of 6

ENGINEERING DRAWING LAYOUT C

2 of 6
Attachment 1/10

REVISIONS

LTR	DESCRIPTION	DATE	APPROVED

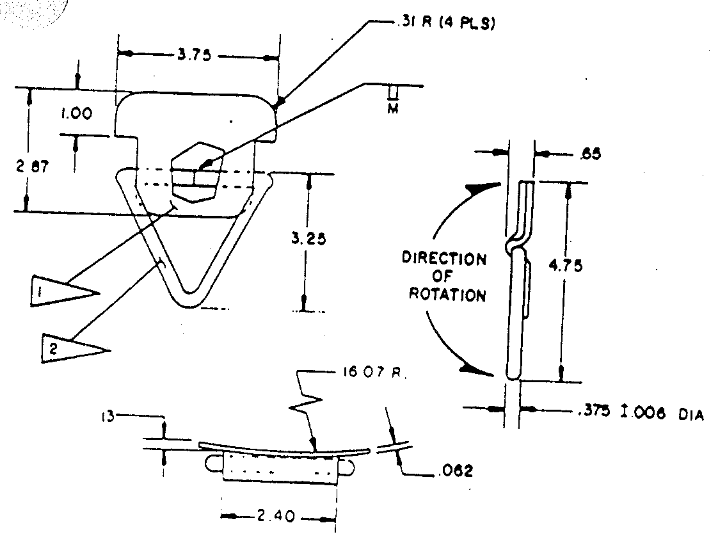

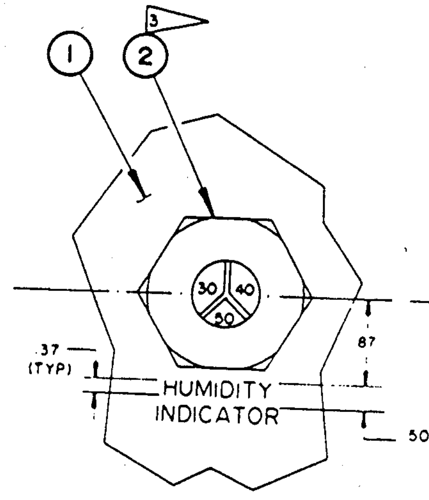

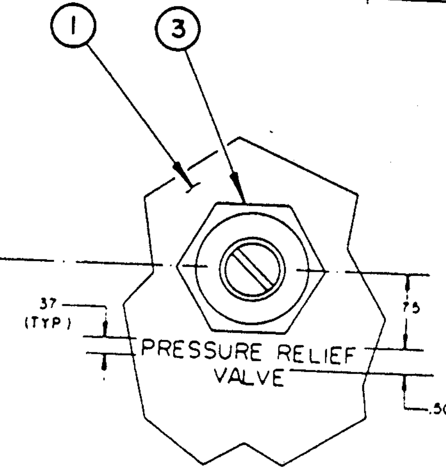

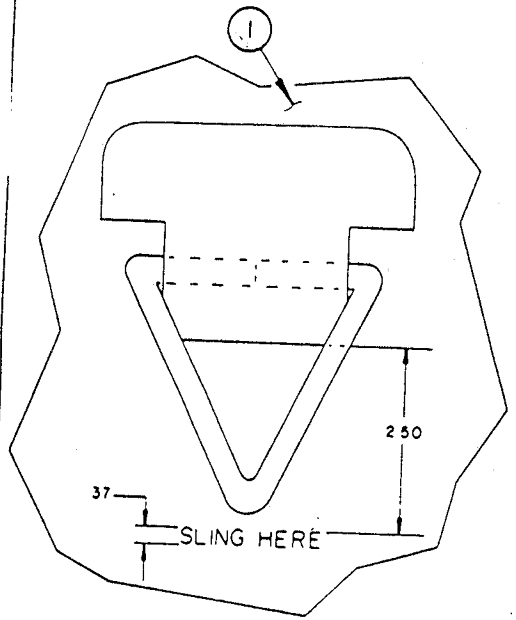

1 MATERIAL

A. RING - STEEL BAR, CARBON, COLD FINISHED AND HOT ROLLED PER ASTM - A108

B. PLATE - STEEL, CARBON, SHEET AND STRIP PER ASTM - A108.

2 SPECIFIC PERFORMANCE REQUIREMENTS:

A. COMPONENT MUST BE CAPABLE OF LIFTING 2800 POUNDS MINIMUM IN DIRECTION OF LIFT.

B. COMPONENT MUST HAVE A HANDLE CAPABLE OF 180° MINIMUM ROTATION IN DIRECTION SHOWN.

3 MIL-V-27166, TYPE III, CLASS 2, 1.0 SCFM - 3.0 SCFM SEALED AT 0.5 PSID.

4 BOTTOM CUSHION REF -8 AND -15 SHALL BE BONDED TOGETHER USING SWIFT'S NO. 17948 ADHESIVE OR EQUAL. THIS ALSO APPLIES TO TOP CUSHION, -12 AND -13.

PACKAGING INSTRUCTIONS

1. PLACE CUSHIONING ASSEMBLY, -8 & -15 IN BOTTOM OF DRUM AND POSITION AIR FOIL WITH RING NESTED INTO CAVITIES.

2. PACKAGE ACCESSORIES INTO INDIVIDUAL BAGS AND PLACE INSIDE OF BOTTOM CAVITY OF THE ADAPTER. ACCESSORIES TO BE BAGGED ARE:

BOLT	BAG SIZE, 6x8	(APPROXIMATELY)
PACKING	" 6x8	"
CABLE	" 6x8	"
SET SCREW	" 6x8	"
FUZE RETAINER & BOLT ASSY	BAG SIZE, 10x10	"

3. PLACE ADAPTER IN CAVITY SHOWN IN DETAIL. PLACE CUSHION -14 OVER TOP AND SIDES.

4. PACKAGE FINS AS SHOWN IN BOX -11, AND CLOSE METHOD IV, PPP-B-636. POSITION BOX ON TOP OF ADAPTER CUSHION. PLACE DESICCANT AS SHOWN.

5. PLACE TOP CUSHION ASSEMBLY -12 & -13 OVER AIRFOIL NESTING THE CAVITIES FIRMLY OVER EACH FIN AND CLOSE CONTAINER ACCORDING TO MIL-D-6054

6 CUSHION -9 TO BE CUT OUT FROM -8 CUSHION

QUANTITY REQUIRED PER DASH NO	STK	NOMENCLATURE	CODE IDENT	IDENTIFYING NO	MATERIAL / SPECIFICATION	UNIT WT	ZONE	FIND NO

PARTS LIST

UNLESS OTHERWISE SPECIFIED DIMENSIONS ARE IN INCHES — TOLERANCES ON: FRACTIONS ± DECIMALS .XX ± .XXX ± ANGLES ±

DR EBC
CHK
ENG
AIR FORCE AUTHENTICATION
AIR FORCE RELEASE

U.S. AIR FORCE

TITLE AIRFOIL GROUP MXU-650/B

SIZE C | AIR FORCE CODE IDENT NO | DRAWING NO. 00-427-9099

SCALE N/A | 1325 | SHEET 3 OF 6

CURRENT CODE IDENT NO. | NEXT ASSEMBLY | USED ON

APPLICATION

AF FORM 1654

ENGINEERING DRAWING LAYOUT C

TPO 00-427-9099

REVISIONS				
ZONE	LTR	DESCRIPTION	DATE	APPROVED

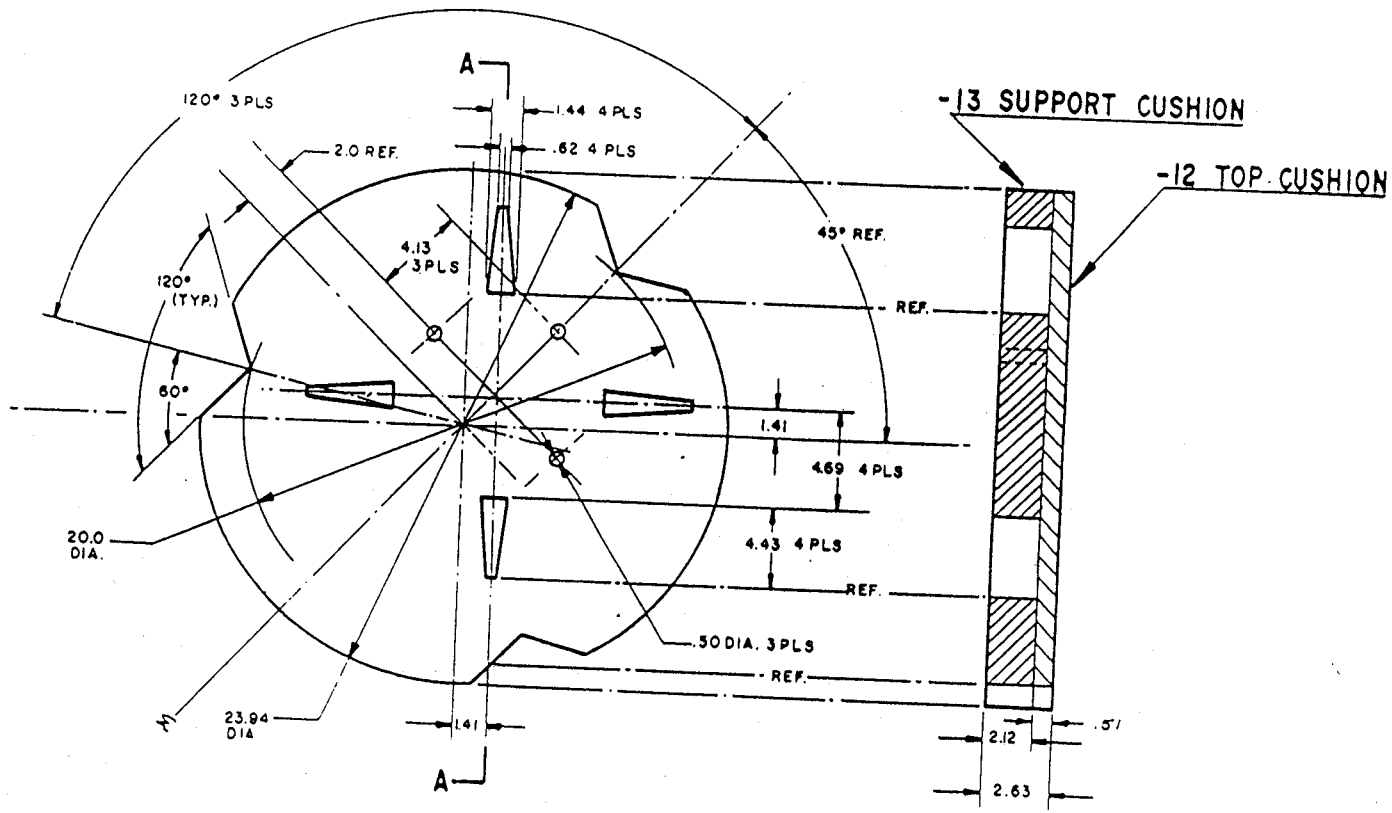

VIEW A-A

REF	QTY	DESCRIPTION		SIZE	MATERIAL	SPECIFICATION			
QTY REQD	SYM	NOMENCLATURE	CODE IDENT	IDENTIFYING NO.	SPECIFICATION	MATERIAL	UNIT WT	ZONE	FIND NO

LIST OF MATERIALS

NEXT ASSY	USED ON	NEXT ASSY	FINAL ASSY
APPLICATION		QTY REQD	

UNLESS OTHERWISE SPECIFIED DIMENSIONS ARE IN INCHES
TOLERANCES ON
FRACTIONS ± DECIMALS .XX ± .XXX ± ANGLES ±
MATERIAL

DRAFTSMAN SBC
CHECKER
ENGINEER
A.F. PROJ. ENGR.
CONTRACT NUMBER
A.F. DESIGN ACTIVITY AUTHENTICATION
DATE

U.S. AIR FORCE
OGDEN ALC HILL AFB UTAH

TITLE
AIRFOIL GROUP
MXU-650/B

SIZE C
A.F. CODE IDENT NO
DRAWING NUMBER TPO 00-427-9099
SCALE 1325
SHEET 4 of 6

ENGINEERING DRAWING LAYOUT C

AF FORM 1654

4 of 6
Attachment 1/10

REVISIONS				
ZONE	LTR	DESCRIPTION	DATE	APPROVED

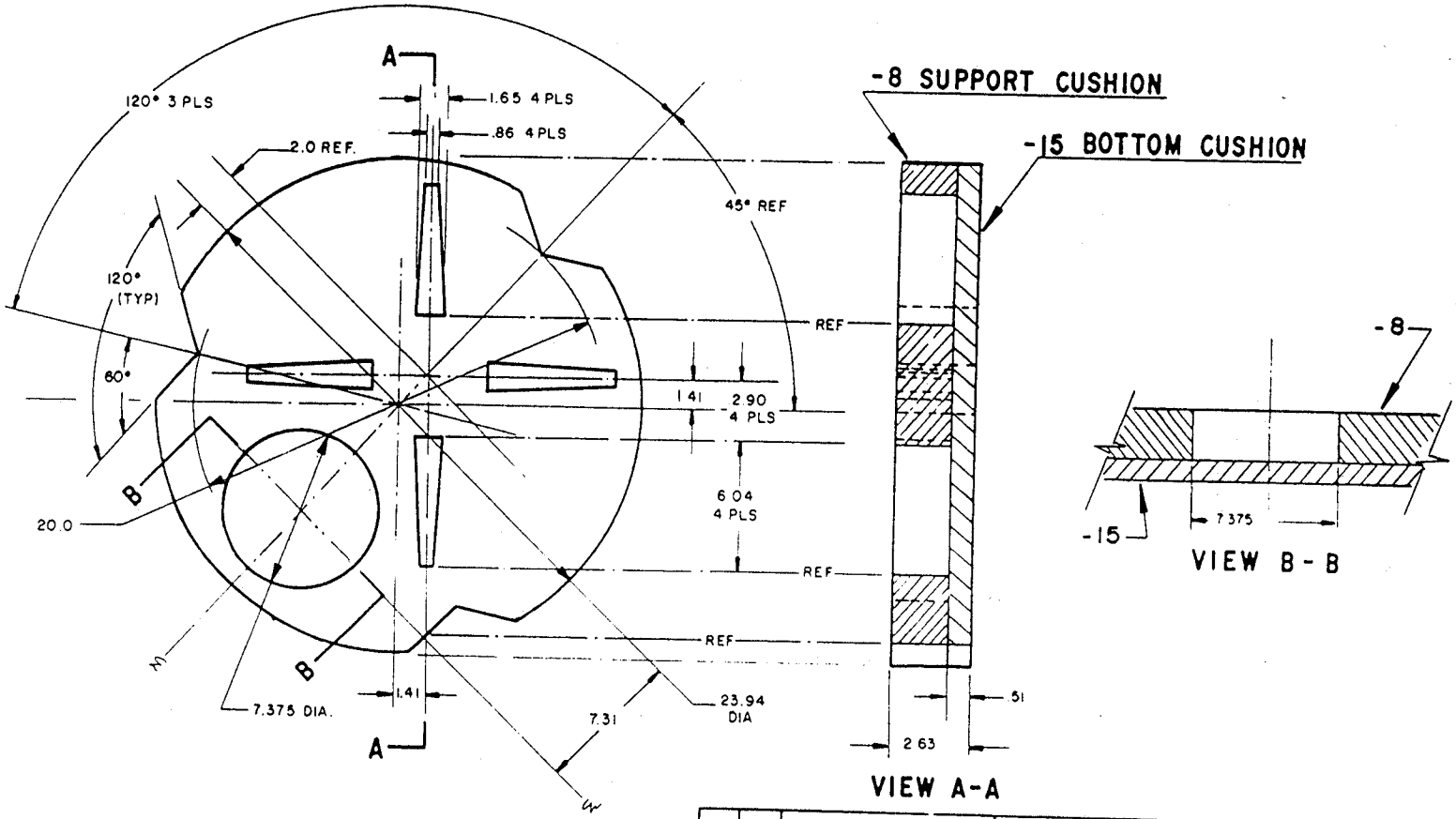

REF	QTY	DESCRIPTION	SIZE	MATERIAL	SPECIFICATION

QTY REQD	SYM	NOMENCLATURE	CODE IDENT	IDENTIFYING NO.	SPECIFICATION	MATERIAL	UNIT WT	ZONE	FIND NO

LIST OF MATERIALS

NEXT ASSY	USED ON	NEXT ASSY	FINAL ASSY
APPLICATION		QTY REQD	

UNLESS OTHERWISE SPECIFIED DIMENSIONS ARE IN INCHES
TOLERANCES ON FRACTIONS ± DECIMALS .XX ± .XXX ± ANGLES ±

MATERIAL

DRAFTSMAN S. Cysel DATE
CHECKER
ENGINEER
A.F. PROJ. ENGR
CONTRACT NUMBER
A.F. DESIGN ACTIVITY AUTHENTICATION

U.S. AIR FORCE
OGDEN ALC HILL AFB UTAH

TITLE
AIRFOIL GROUP
MXU - 650/B

SIZE C | A.F. CODE IDENT NO | DRAWING NUMBER TPO 00-427-9099
SCALE 1:4 | 1325 | SHEET 5 OF 6

AF FORM MAY 63 1654 REPLACES AF FORMS 1654 AND 1654A DEC 61 WHICH ARE OBSOLETE

ENGINEERING DRAWING LAYOUT C

TPO 00-427-9099

REVISIONS			
LTR	DESCRIPTION	DATE	APPROVED

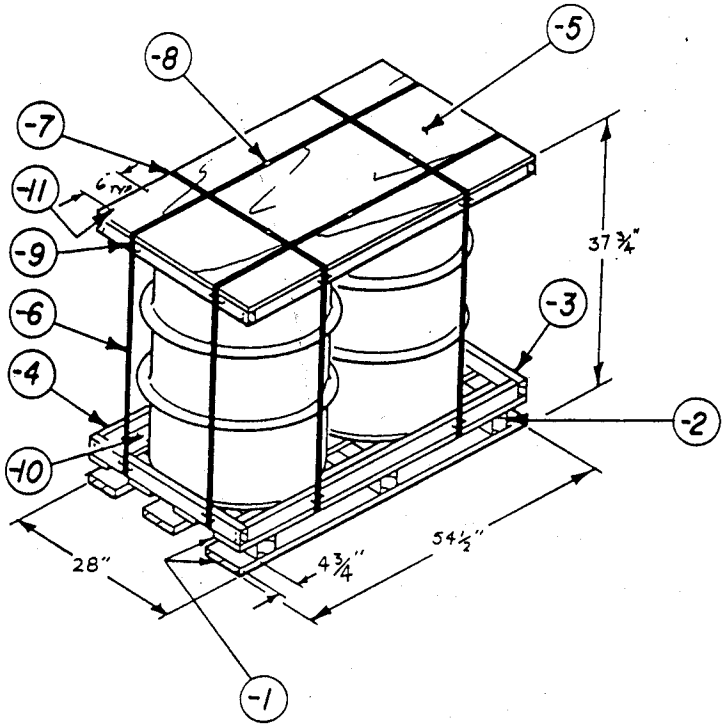

2-DRUM PALLET UNIT

2 DRUM UNIT WT	307.6
DUNNAGE & PALLET	82.0
TOTAL WT	389.6
CUBE	33.34

PALLETIZING PROCEDURE

1. ASSEMBLE PALLET AS SHOWN. SECURE UPPER AND LOWER DECK BOARD, REF -1 TO STRINGERS, REF -2, WITH NAILS, REF -10.
2. SECURE END SILLS, REF -3 TO SIDE SILLS, REF -4 WITH NAILS, REF -10 SECURE BOTTOM SILL ASSEMBLY TO PALLET WITH REF -10. SECURE -3/-4 TO REF -5 W/-11.
3. POSITION DRUMS ON PALLET AND PLACE TOP SILL OVER DRUMS AS SHOWN.
4. THREAD STRAPPING, REF -6, UNDER SILL ASSEMBLY THROUGH SLOTS ON PALLET AND OVER TOP CAP AND TENSION STRAPPING, AND DOUBLE CRIMP SEAL, REF -8.
5. POSITION STRAPPING, REF -7, UNDER PALLET DECK AND OVER TOP CAP. TENSION STRAPPING AND DOUBLE CRIMP SEAL, REF -8.
6. SECURE STRAPPING TO END AND SIDE SILLS WITH STAPLES, Ref -9.

DEPALLETIZING PROCEDURES

1. CUT AND REMOVE STRAPPING, REF -6 AND -7.
2. REMOVE TOP SILL FROM OFF THE DRUMS.
3. REMOVE DRUMS FROM THE PALLET.

NOTE

PRESSURE TREAT ALL WOOD WITH PQ56 OR EQUAL AS MANUFACTURED BY CHAPMAN CHEMICALS, INC. OF MEMPHIS, TENNESSEE. MINIMUM RETENTION RATE 0.25% AFTER TREATMENT. LUMBER SHALL BE KILN DRIED WITH MOISTURE CONTENT IAW MIL-STD-731.

QUANTITY REQUIRED PER DASH NO.			SYM	NOMENCLATURE	CODE IDENT	IDENTIFYING NO.	MATERIAL / SPECIFICATION	UNIT WT	ZONE	FIND NO.
11	26	NAILS		5d			STYLE-4A OR 18 CEMENT COATED			
10	122	PALLET NAILS		8d			TYPE II, STYLE-4A OR 18 CEMENT COATED			
9	16	STAPLES		3/4 X 5/8 X .083			FF-N-105, TYPE III, STYLE-4			
8	4	SEALS		TO FIT 5/8 BAND			TYPE D, STYLE I, CL-B			
7	2	PRIMARY STRAPPING		136 X 5/8 X .023			QQ-S-781, CL-1, TYPE I, REG DUTY, FIN B, GR-2			
6	2	SECONDARY STRAPPING		190 X 5/8 X .023			NN-P-530, GROUP-B			
5	1	TOP CAP		54 1/2 X 28 X 5/8						
4	4	SIDE SILLS		1X4 (NOM) X 53						
3	4	END SILLS		1X4 (NOM) X 28						
2	3	STRINGERS		2X4 (NOM) X 28						
1	7	DECK BOARDS UPPER & LOWER		1X6 (NOM) X 54 1/2			MIL-STD-731, CL-2			

PARTS LIST

UNLESS OTHERWISE SPECIFIED DIMENSIONS ARE IN INCHES — TOLERANCES ON: FRACTIONS ± DECIMALS .XX ± .XXX ± ANGLES ±

DR
CHK
ENG
AIR FORCE AUTHENTICATION
AIR FORCE RELEASE

U.S. AIR FORCE

TITLE
AIRFOIL GROUP
MXU-650/B

SIZE C | AIR FORCE CODE IDENT NO. | DRAWING NO. 00-427-9099

SCALE 1/32 | SHEET 6 of 6

CURRENT CODE IDENT NO. | NEXT ASSEMBLY | USED ON
APPLICATION

AF FORM 1654

ENGINEERING DRAWING LAYOUT C

Attachment 1 6 of 6