CERTIFICATION REGARDING THE USE OF RIGHTS GUARD TECHNICAL DATA

a. The bidder/offeror certifies that he will observe the following data disclosure and use restrictions on all data claimed to be proprietary to the Boeing Company (hereafter called "Rights Guard Technical Data"):

1. Rights Guard Technical Data shall not be reproduced, in whole or in part, except as required to respond to the Rights Guard Solicitation, or to perform any resulting Rights Guard Contract.

2. Rights Guard Technical Data shall not be incorporated, in whole or in part, into other documentation, nor shall it be otherwise utilized except as required to respond to the Rights Guard Contract.

3. Rights Guard Technical Data shall not be disclosed, in whole or in part, to any other person or entity and shall be disclosed within bidder's/offeror's company only to those employees having a need to know for the purpose of responding to the Rights Guard Solicitation or performing any resulting Rights Guard Contract.

4. Rights Guard Technical Data will be returned or destroyed by all unsuccessful bidders/offerors promptly upon the award of a contract, and by each contractor promptly upon completion of contract performance. Mylars are not to be returned, but certification that they have been destroyed will be furnished. Simultaneously with the return or destruction of all such data, the respective bidder/offeror/contractor shall provide to the government a certification that all Rights Guard Technical Data has been returned or destroyed, as appropriate. This certification shall contain complete listing by drawing number or document number of the data destroyed. Failure to take such actions shall be grounds for removal of the bidder/offeror/contractor from qualifying bidders lists for all Rights Guard Procurements.

b. CAUTION: The Government will notify The Boeing Company of an actual or suspected breach of he restrictions set forth in this certificate which may come within its knowledge. A violation of such restrictions may be grounds for legal proceedings against the violators by the Government and/or by The Boeing Company.

c. Rights Guard Certifications shall be made a part of the Government's contract file to which the certification pertains. This file and any related documentation shall be made available to The Boeing Company upon request.

_____
Company Name, Address & Mfg Code

_____
Signature

_____
Typed Name

_____
Date

NOTE #1 Rights Guard Certifications that contain alterations deletions or additions will not be accepted, and no Rights Guard Technical Data will be transmitted to any bidder/offeror until an unaltered, properly executed Rights Guard Certification has been received by the Government.

NOTE #2 Any previous unmarked KC-135R Data previously furnished by the U.S. Air Force and not having the "Boeings Proprietary Rights Legend" on it will be marked with the following legend before use of such data:

Government Purpose License Legend

Contract No. Settlement Agreement in CL. ct. No. 309-89C

Contractor: The Boeing Company

Government Purpose License Rights shall be effective until otherwise mutually agreed by the government and Boeing.

The restrictions governing use of technical data marked with this legend are set forth in the definition of "Government Purpose License Rights" in paragraph (a)(14) of the clause at DFARS 252.227-7013 (Oct 1988). This legend, together with the indications of the portions of this data which are subject to Government purpose license rights, shall be included on any reproduction thereof which includes any part of the portions subject to such limitations.

03-033

CONTRACT DATA REQUIREMENTS LIST (1 Data Item)	Form Approved OMB No. 0704-0188

Public reporting burden for this collection of information is estimated to average 110 hours per response, including the time for reviewing instructions, searching existing data sources, gathering and maintaining the data needed, and completing and reviewing the collection of information. Send comments regarding this burden estimate or any other aspect of this collection of information, including suggestions for reducing this burden to Department of Defense, Washington Headquarters Services, Directorate for Information Operations and Reports, 1215 Jefferson Davis Highway, Suite 1204, Arlington, VA 22202-4302, and to the Office of Management and Budget, Paperwork Reduction Project (0704-0188), Washington DC 20503. Please DO NOT RETURN your form to either of these addresses. Send completed form to the government Issuing Contracting Officer for the Contract/PR No. in Block E.

A. CONTRACT LINE ITEM NO.	B. EXHIBIT A	C: CATEGORY: TESTING AND INSPECTION TDP_____ TM_____ OTHER_____
D. SYSTEM/ITEM PISTON SUBASSY,STOCK STRU	E. CONTRACT/PR NO. FD2020-03-23066	F. CONTRACTOR

1. DATA ITEM NO.	2. TITLE OF DATA ITEM	3. SUBTITLE	17. PRICE GROUP
A001	TEST/INSPECTION REPORTS	GOVERNMENT TESTING	

4. AUTHORITY (Data Acquisition Document No.)	5. CONTRACT REFERENCE	6. REQUIRING OFFICE	18. ESTIMATED TOTAL PRICE
DI-NDTI-80809B/T		OO-ALC/MADLV	

7. DD 250 REQ	9. DIST STATEMENT REQUIRED	10. FREQUENCY	12. DATE OF FIRST SUBMISSION	14. DISTRIBUTION
DD		OTIME	BLK 16	
8. APP CODE		11. AS OF DATE	13. DATE OF SUBSEQUENT SUBM.	
N/A	D	N/A	N/A	

16. REMARKS

(4) Contractor format acceptable. Paragraph 10.2 of DD Form 1664 is clarified as follows:

All dimensions and tolerances specified on the manufacturing data shall be listed in one column with the actual corresponding reading obtained from inspection of the part, listed in another column.

Materials utilized in the manufacture of "First Article" item shall be identified and certified along with a copy of material purchase requests as conforming to applicable data requirements.

Material processes including finish requirements (plating, heat treatment welding inspections, anodize, painting, etc.) utilized in the manufacture of the first article will be identified and certified as conforming to the applicable requirements. A copy of the purchase order certifying the processes accomplished at other than contractor facility shall be included.

Other requirements as called out on Engineering Data Requirement (AFLC Form 3720).

(9) DISTRIBUTION STATEMENT D: Distribution authorized to the Department of Defense and DOD contractors only (Critical Technology)(15 Sept 95). Other requests for this document shall be referred to OO-ALC/LGHS.

(12) Submit concurrently with First Article.

FOB DESTINATION

a. ADDRESSEE	b. COPIES draft	final reg	final repr
OO-ALC/MADLV		1	
7278 4TH STREET			
BLDG 100, BAY D			
HILL AFB UT			
84056-5205			
15. TOTAL -------->	0	1	0

G. PREPARED BY	H. DATE	I. APPROVED BY	J. DATE
Ray Brown LGOO Data Mgr.	27 JUNE 03	Bryan Smith LGOO Branch Ch	27 JUNE 03

INSTRUCTIONS FOR COMPLETING DD FORM 1423

(See DoD 5010.12M for detailed instructions.)

FOR GOVERNMENT PERSONNEL

Item A. Self-explainatory.

Item B. Self-explainatory.

Item C. Mark (X) appropriate category: TDP - Technical Data Package; TM - Technical Manual; Other - other category of data, such as 'Provisioning', 'Configuration Management', etc.

Item D. Enter name of system/item being acquired that data will

Item E. Self-explainatory (to be filled in after contract award).

Item F. Self-explainatory (to be filled in after contract award).

Item G. Signature of preparer.

Item H. Date CDRL was prepared.

Item I. Signature of CDRL approval authority.

Item J. Date CDRL was approved.

Item 1. See DoD FAR Supplement Subpart 4.71 for proper numbering.

Item 2. Enter title as it appears on data acquisition document cited in Item 4.

Item 3. Enter subtitle of data item for futher definition of data item (optional entry).

Item 4. Enter Data Item Description (DID) number, military specification number, or military standard number listed in DoD 5010.12-L (AMSDL), or one-time DID number, that defines data content and format requirements.

Item 5. Enter reference to tasking in contract that generates requirement for the data item (e.g. Statement of Work paragraph number).

Item 6. Enter technical office responsible for ensuring adequacy of the data item.

Item 7. Specify requirement for inspection/acceptance of the data item by the Government.

Item 8. Specify requirement for approval of a draft before preparation of the final data item.

Item 9. For technical data, specify requirement for contractor to mark the appropriate distribution statement on the data (ref DoDD 5230.24).

Item 10. Specify number of times data items are to be delivered.

Item 11. Specify as-of date of data item, when applicable.

Item 12. Specify when first submittal is required.

Item 13. Specify when subsequent submittals are required, when applicable.

Item 14. Enter addresses and number of draft/final copies to be delivered to each addressee. Explain reproducible copies in Item 16.

Item 15. Enter total number of draft/final copies to be delivered.

Item 16. Use for additional/clarifying information for items 1 through 15. Examples are: Tailoring of documents cited in Item 4; Clarification of submittal dates in Items 12 and 13; Explanation of reproducible copies in Item 14; Desired medium for delivery of the data item.

FOR THE CONTRACTOR

Item 17. Specify appropriate price group from one of the following groups of effort in developing estimated prices for each data item listed on the DD Form 1423.

a. Group I. Definition - Data which is not otherwise essential to the contractor's performance of the primary contracted effort (production, development, testing and administration) but which is required by DD Form 1423.

Estimated Price - Costs to be included under Group I are those applicable to preparing and assembling the data item in conformance with Government requirements, and the administration and other expenses related to reproducing and delivering such data items to the Government.

b. Group II. Definition - Data which is essential to the performance of the primary contracted effort but the contractor is required to perform additional work to conform to Government requirements with regard to depth of content, format, frequency of submittal, preparation, control, or quality of the data item.

Estimated Price - Costs to be included under Group II are those incurred over and above the cost of the essential data item without conforming to Government requirements, and the administrative and other expenses related to reproducing and delivering such data item to the Government.

c. Group III. Definition - Data which the contrator must develop for his internal use in performance of the primary contracted effort and does not require any substantial change to conform to Government requirements with regard to depth of content, format, frequency of submittal, preparation, control, and quality of the data item.

Estimated Price - Costs to be included under Group III are the administrative and other expenses related to reproducing and delivering such data item to the Government.

d. Group IV. Definition - Data which is developed by the contractor as part of his normal operating procedures and his effort in supplying these data to the Government is minimal.

Estimated Price - Group IV items should normally be shown on the DD Form 1423 at no cost.

Item 18. For each data item, enter an amount equal to that portion of the total price which is estimated to be attributable to the production or development for the Government of that item of data. These estimated data prices shall be developed only from those costs which will be incurred as a direct result of the requirement to supply data, over and above those costs which would otherwise be incurred in performance of the contract if no data were required. The estimated data prices shall not include any amount for rights in data. The Government's right to use data shall be governed by the pertinent provisions of the contract.

PACKAGING REQUIREMENTS

PR, MIPR, OR DOCUMENT NUMBER FD2020-03-23066

1. PACKAGING REQUIREMENTS: Block 1 shall always be completed and further defined in Blocks 2, 3, or 4. The term "Item ID" refers to line item number, item name, NSN/MMAC, part number, or any other way of identifying a particular item. MIL-STD-2073-1 represents Military Preservation (PRES) and Packing (PACK). Military packing consists of levels A, B, and Minimum (M). ASTM D3951 could be substituted by another document if specified in Block 2. Quantity Per Unit Pack (QUP) and Commercial Best Practice (CBP) are abbreviated. The reverse side of this form has the European Union environmental requirements.

ITEM ID	QUP (#)	MIL-STD-2073-1 PRES (X)	MIL-STD-2073-1 PACK (A/B/M)	COMMERCIAL ASTM D3951 PRES (X)	COMMERCIAL ASTM D3951 PACK (X)	CBP (X)	SPECIAL PACKAGING INSTRUCTION NUMBER
1620-01-018-4758 0001	001	X	B				F010184758 78114
1620017676214 0002	001	X	B				F010176680 03111
1620010121969 0003	001	X	B				

2. ADDITIONAL PACKAGING AND CONTAINER MARKING REQUIREMENTS *(Specify all revisions and dates of required specifications, standards, and data item descriptions (DIDs))*

3. INSTRUCTIONS TO CONTRACTING OFFICER: Insert appropriate clause(s) into Section D for applicable item(s) as indicated below.

- X AFMCFARS 5352.247-9005, SHIPPING CONTAINER MARKING. ITEM NAME(s)OR NSN/MMAC
- AFMCFARS 5352.247-9006, MARKING OF WARRANTED ITEMS. ITEM NAME(s) OR NSN/MMAC
- AFMCFARS 5352.247-9007, SPECIFICATION COMMERCIAL PACKAGING (ASTM D3951). ITEM NAME(s) OR NSN/MMAC
- AFMCFARS 5352.247-9008, CONTRACTOR COMMERCIAL PACKAGING *(Commercial Best Practice)*. ITEM NAME(s) OR NSN/MMAC
- X AFMCFARS 5352.247-9009, MILITARY PACKAGING AND MARKING. ITEM NAME(s) OR NSN/MMAC
- AFMCFARS 5352.247-9010, ENGINEERED OR SPECIALIZED CONTAINERS (CDRS). ITEM NAME(s) OR NSN/MMAC
- AFMCFARS 5352.247-9011, PACKAGING AND MARKING OF HAZARDOUS MATERIAL. ITEM NAME(s) OR NSN/MMAC
- AFMCFARS 5352.247-9013, PACKAGING DATA *(Coded and/or Special Packaging Instructions)*. ITEM NAME(s) OR NSN/MMAC

4. CODED DATA: Coded requirements shall be interpreted in accordance with MIL-STD-2073-1.

ITEM	QUANTITY QUP	QUANTITY ICQ	PRES METH	CD	PRES MTL	WRAP MTL	CUSH DUNN	CT	UNIT CONT	INT CON	UCL	SPEC MKG	UNIT PACK WEIGHT (10)	UNIT PACK SIZE LENGTH (10)	UNIT PACK SIZE WIDTH (10)	UNIT PACK SIZE DEPTH (10)	UNIT PACK CUBE WHOLE CUBE	UNIT PACK CUBE 1000TH	OPI
1620010121969 0003	001	000	33	1	02	JA	LC	B	EE	00	B	00	0021	0039	0004	0004	0000	361	0

ORGANIZATION: LGMPA

PACKAGING SPECIALIST *(Typed Name/Signature)*: Mike Stephens

DATE: 2003/7/8

AFMC FORM 158, 20030408 *(EF-V1)*

PREVIOUS EDITION IS OBSOLETE

SEE REVERSE SIDE

PACKAGING REQUIREMENTS

PR, MIPR, OR DOCUMENT NUMBER FD2020-03-23066

1. PACKAGING REQUIREMENTS: Block 1 shall always be completed and further defined in Blocks 2, 3, or 4. The term "Item ID" refers to line item number, item name, NSN/MMAC, part number, or any other way of identifying a particular item. MIL-STD-2073-1 represents Military Preservation (PRES) and Packing (PACK). Military packing consists of levels A, B, and Minimum (M). ASTM D3951 could be substituted by another document if specified in Block 2. Quantity Per Unit Pack (QUP) and Commercial Best Practice (CBP) are abbreviated. The reverse side of this form has the European Union environmental requirements.

ITEM ID	QUP (#)	MIL-STD-2073-1 PRES (X)	MIL-STD-2073-1 PACK (A/B/M)	COMMERCIAL ASTM D3951 PRES (X)	COMMERCIAL ASTM D3951 PACK (X)	CBP (X)	SPECIAL PACKAGING INSTRUCTION NUMBER
1620003109830 0005	001	X	B				F003109830 88336
1620010753562 0006	001	X	B				
1620012332153 0007	001	X	B				F012332153 89129

2. ADDITIONAL PACKAGING AND CONTAINER MARKING REQUIREMENTS *(Specify all revisions and dates of required specifications, standards, and data item descriptions (DIDs))*

3. INSTRUCTIONS TO CONTRACTING OFFICER: Insert appropriate clause(s) into Section D for applicable item(s) as indicated below.

- X AFMCFARS 5352.247-9005, SHIPPING CONTAINER MARKING. ITEM NAME(s)OR NSN/MMAC
- AFMCFARS 5352.247-9006, MARKING OF WARRANTED ITEMS. ITEM NAME(s) OR NSN/MMAC
- AFMCFARS 5352.247-9007, SPECIFICATION COMMERCIAL PACKAGING (ASTM D3951). ITEM NAME(s) OR NSN/MMAC
- AFMCFARS 5352.247-9008, CONTRACTOR COMMERCIAL PACKAGING *(Commercial Best Practice)*. ITEM NAME(s) OR NSN/MMAC
- X AFMCFARS 5352.247-9009, MILITARY PACKAGING AND MARKING. ITEM NAME(s) OR NSN/MMAC
- AFMCFARS 5352.247-9010, ENGINEERED OR SPECIALIZED CONTAINERS (CDRS). ITEM NAME(s) OR NSN/MMAC
- AFMCFARS 5352.247-9011, PACKAGING AND MARKING OF HAZARDOUS MATERIAL. ITEM NAME(s) OR NSN/MMAC
- AFMCFARS 5352.247-9013, PACKAGING DATA *(Coded and/or Special Packaging Instructions)*. ITEM NAME(s) OR NSN/MMAC

4. CODED DATA: Coded requirements shall be interpreted in accordance with MIL-STD-2073-1.

ITEM	QUANTITY QUP	QUANTITY ICQ	PRES METH	CD	PRES MTL	WRAP MTL	CUSH DUNN	CT	UNIT CONT	INT CON	UCL	SPEC MKG	UNIT PACK WEIGHT	UNIT PACK SIZE LENGTH	UNIT PACK SIZE WIDTH	UNIT PACK SIZE DEPTH	UNIT PACK CUBE WHOLE CUBE	UNIT PACK CUBE 1000TH	OPI
1620010753562 0006	001	000	20	1	02	GB	XX	X	NV	00	B	00	00695	031	0028	0015	00000	534	M

ORGANIZATION: LGMPA

PACKAGING SPECIALIST *(Typed Name/Signature)*: Mike Stephens

DATE: 2003/7/8

AFMC FORM 158, 20030408 *(EF-V1)*

PREVIOUS EDITION IS OBSOLETE

SEE REVERSE SIDE

PACKAGING REQUIREMENTS

PR, MIPR, OR DOCUMENT NUMBER FD2020-03-23066

1. PACKAGING REQUIREMENTS: Block 1 shall always be completed and further defined in Blocks 2, 3, or 4. The term "Item ID" refers to line item number, item name, NSN/MMAC, part number, or any other way of identifying a particular item. MIL-STD-2073-1 represents Military Preservation (PRES) and Packing (PACK). Military packing consists of levels A, B, and Minimum (M). ASTM D3951 could be substituted by another document if specified in Block 2. Quantity Per Unit Pack (QUP) and Commercial Best Practice (CBP) are abbreviated. The reverse side of this form has the European Union environmental requirements.

ITEM ID	QUP (#)	MIL-STD-2073-1 PRES (X)	MIL-STD-2073-1 PACK (A/B/M)	COMMERCIAL ASTM D3951 PRES (X)	COMMERCIAL ASTM D3951 PACK (X)	CBP (X)	SPECIAL PACKAGING INSTRUCTION NUMBER
1620010760547 0008	001	X	B				
1620012352927 0009	001	X	B				F012352927 88060
1620012329310 0010	001	X	B				F012329310 03138

2. ADDITIONAL PACKAGING AND CONTAINER MARKING REQUIREMENTS *(Specify all revisions and dates of required specifications, standards, and data item descriptions (DIDs))*

3. INSTRUCTIONS TO CONTRACTING OFFICER: Insert appropriate clause(s) into Section D for applicable item(s) as indicated below.

- X AFMCFARS 5352.247-9005, SHIPPING CONTAINER MARKING. ITEM NAME(s)OR NSN/MMAC
- AFMCFARS 5352.247-9006, MARKING OF WARRANTED ITEMS. ITEM NAME(s) OR NSN/MMAC
- AFMCFARS 5352.247-9007, SPECIFICATION COMMERCIAL PACKAGING (ASTM D3951). ITEM NAME(s) OR NSN/MMAC
- AFMCFARS 5352.247-9008, CONTRACTOR COMMERCIAL PACKAGING *(Commercial Best Practice)*. ITEM NAME(s) OR NSN/MMAC
- X AFMCFARS 5352.247-9009, MILITARY PACKAGING AND MARKING. ITEM NAME(s) OR NSN/MMAC
- AFMCFARS 5352.247-9010, ENGINEERED OR SPECIALIZED CONTAINERS (CDRS). ITEM NAME(s) OR NSN/MMAC
- AFMCFARS 5352.247-9011, PACKAGING AND MARKING OF HAZARDOUS MATERIAL. ITEM NAME(s) OR NSN/MMAC
- AFMCFARS 5352.247-9013, PACKAGING DATA *(Coded and/or Special Packaging Instructions)*. ITEM NAME(s) OR NSN/MMAC

4. CODED DATA: Coded requirements shall be interpreted in accordance with MIL-STD-2073-1.

ITEM	QUANTITY QUP	QUANTITY ICQ	PRES METH	CD	PRES MTL	WRAP MTL	CUSH DUNN	CT	UNIT CONT	INT CON	UCL	SPEC MKG	UNIT PACK WEIGHT (10)	UNIT PACK SIZE LENGTH (10)	UNIT PACK SIZE WIDTH (10)	UNIT PACK SIZE DEPTH (10)	UNIT PACK CUBE WHOLE CUBE	UNIT PACK CUBE 1000TH	OPI
1620010760547 0008	001	000	20	1	02	GB	XX	X	NV	00	B	00	0069 5	031	0028	0015	0028	000	M

ORGANIZATION: LGMPA

PACKAGING SPECIALIST *(Typed Name/Signature)*: Mike Stephens

DATE: 2003/7/8

AFMC FORM 158, 20030408 *(EF-V1)*

PREVIOUS EDITION IS OBSOLETE

SEE REVERSE SIDE

PACKAGING REQUIREMENTS

PR, MIPR, OR DOCUMENT NUMBER FD2020-03-23066

1. PACKAGING REQUIREMENTS: Block 1 shall always be completed and further defined in Blocks 2, 3, or 4. The term "Item ID" refers to line item number, item name, NSN/MMAC, part number, or any other way of identifying a particular item. MIL-STD-2073-1 represents Military Preservation (PRES) and Packing (PACK). Military packing consists of levels A, B, and Minimum (M). ASTM D3951 could be substituted by another document if specified in Block 2. Quantity Per Unit Pack (QUP) and Commercial Best Practice (CBP) are abbreviated. The reverse side of this form has the European Union environmental requirements.

ITEM ID	QUP (#)	MIL-STD-2073-1 PRES (X)	MIL-STD-2073-1 PACK (A/B/M)	COMMERCIAL ASTM D3951 PRES (X)	COMMERCIAL ASTM D3951 PACK (X)	CBP (X)	SPECIAL PACKAGING INSTRUCTION NUMBER
1620012363518 0011	001	X	B				F012363518 99067
1620012590559 0013	001	X	B				F010710534 99088
1620012531350 0014	001	X	B				F012531350 99047

2. ADDITIONAL PACKAGING AND CONTAINER MARKING REQUIREMENTS *(Specify all revisions and dates of required specifications, standards, and data item descriptions (DIDs))*

3. INSTRUCTIONS TO CONTRACTING OFFICER: Insert appropriate clause(s) into Section D for applicable item(s) as indicated below.

- [X] AFMCFARS 5352.247-9005, SHIPPING CONTAINER MARKING. ITEM NAME(s)OR NSN/MMAC
- [ ] AFMCFARS 5352.247-9006, MARKING OF WARRANTED ITEMS. ITEM NAME(s) OR NSN/MMAC
- [ ] AFMCFARS 5352.247-9007, SPECIFICATION COMMERCIAL PACKAGING (ASTM D3951). ITEM NAME(s) OR NSN/MMAC
- [ ] AFMCFARS 5352.247-9008, CONTRACTOR COMMERCIAL PACKAGING *(Commercial Best Practice)*. ITEM NAME(s) OR NSN/MMAC
- [X] AFMCFARS 5352.247-9009, MILITARY PACKAGING AND MARKING. ITEM NAME(s) OR NSN/MMAC
- [ ] AFMCFARS 5352.247-9010, ENGINEERED OR SPECIALIZED CONTAINERS (CDRS). ITEM NAME(s) OR NSN/MMAC
- [ ] AFMCFARS 5352.247-9011, PACKAGING AND MARKING OF HAZARDOUS MATERIAL. ITEM NAME(s) OR NSN/MMAC
- [ ] AFMCFARS 5352.247-9013, PACKAGING DATA *(Coded and/or Special Packaging Instructions)*. ITEM NAME(s) OR NSN/MMAC

4. CODED DATA: Coded requirements shall be interpreted in accordance with MIL-STD-2073-1.

ITEM	QUANTITY QUP	QUANTITY ICQ	PRES METH	CD	PRES MTL	WRAP MTL	CUSH DUNN	CT	UNIT CONT	INT CON	UCL	SPEC MKG	UNIT PACK WEIGHT	UNIT PACK SIZE LENGTH	UNIT PACK SIZE WIDTH	UNIT PACK SIZE DEPTH	UNIT PACK CUBE WHOLE CUBE	UNIT PACK CUBE 1000TH	OPI

ORGANIZATION: LGMPA

PACKAGING SPECIALIST *(Typed Name/Signature)*: Mike Stephens

DATE: 2003/7/8

AFMC FORM 158, 20030408 *(EF-V1)* PREVIOUS EDITION IS OBSOLETE

SEE REVERSE SIDE

PACKAGING REQUIREMENTS

PR, MIPR, OR DOCUMENT NUMBER FD2020-03-23066

1. PACKAGING REQUIREMENTS: Block 1 shall always be completed and further defined in Blocks 2, 3, or 4. The term "Item ID" refers to line item number, item name, NSN/MMAC, part number, or any other way of identifying a particular item. MIL-STD-2073-1 represents Military Preservation (PRES) and Packing (PACK). Military packing consists of levels A, B, and Minimum (M). ASTM D3951 could be substituted by another document if specified in Block 2. Quantity Per Unit Pack (QUP) and Commercial Best Practice (CBP) are abbreviated. The reverse side of this form has the European Union environmental requirements.

ITEM ID	QUP (#)	MIL-STD-2073-1 PRES (X)	MIL-STD-2073-1 PACK (A/B/M)	COMMERCIAL ASTM D3951 PRES (X)	COMMERCIAL ASTM D3951 PACK (X)	CBP (X)	SPECIAL PACKAGING INSTRUCTION NUMBER
1620012523344 0015	001	X	B				F012523344 99109
1620012524035 0016	001	X	B				
1620014420167 0017	001	X	B				F012007131 87362

2. ADDITIONAL PACKAGING AND CONTAINER MARKING REQUIREMENTS *(Specify all revisions and dates of required specifications, standards, and data item descriptions (DIDs))*

3. INSTRUCTIONS TO CONTRACTING OFFICER: Insert appropriate clause(s) into Section D for applicable item(s) as indicated below.

- X AFMCFARS 5352.247-9005, SHIPPING CONTAINER MARKING. ITEM NAME(s)OR NSN/MMAC
- AFMCFARS 5352.247-9006, MARKING OF WARRANTED ITEMS. ITEM NAME(s) OR NSN/MMAC
- AFMCFARS 5352.247-9007, SPECIFICATION COMMERCIAL PACKAGING (ASTM D3951). ITEM NAME(s) OR NSN/MMAC
- AFMCFARS 5352.247-9008, CONTRACTOR COMMERCIAL PACKAGING *(Commercial Best Practice)*. ITEM NAME(s) OR NSN/MMAC
- X AFMCFARS 5352.247-9009, MILITARY PACKAGING AND MARKING. ITEM NAME(s) OR NSN/MMAC
- AFMCFARS 5352.247-9010, ENGINEERED OR SPECIALIZED CONTAINERS (CDRS). ITEM NAME(s) OR NSN/MMAC
- AFMCFARS 5352.247-9011, PACKAGING AND MARKING OF HAZARDOUS MATERIAL. ITEM NAME(s) OR NSN/MMAC
- AFMCFARS 5352.247-9013, PACKAGING DATA *(Coded and/or Special Packaging Instructions)*. ITEM NAME(s) OR NSN/MMAC

4. CODED DATA: Coded requirements shall be interpreted in accordance with MIL-STD-2073-1.

ITEM	QUANTITY QUP	QUANTITY ICQ	PRES METH	CD	PRES MTL	WRAP MTL	CUSH DUNN	CT	UNIT CONT	INT CON	UCL	SPEC MKG	UNIT PACK WEIGHT	UNIT PACK SIZE LENGTH	UNIT PACK SIZE WIDTH	UNIT PACK SIZE DEPTH	UNIT PACK CUBE WHOLE CUBE	UNIT PACK CUBE 1000TH	OPI
1620012524035	001	000	10	1	00	XX	XX	X	NR	00	B	00	0013	0012	5012	5018	5008	1672	M

ORGANIZATION: LGMPA

PACKAGING SPECIALIST *(Typed Name/Signature)*: Mike Stephens

DATE: 2003/7/8

AFMC FORM 158, 20030408 *(EF-V1)*

PREVIOUS EDITION IS OBSOLETE

SEE REVERSE SIDE

PACKAGING REQUIREMENTS

PR, MIPR, OR DOCUMENT NUMBER FD2020-03-23066

1. PACKAGING REQUIREMENTS: Block 1 shall always be completed and further defined in Blocks 2, 3, or 4. The term "Item ID" refers to line item number, item name, NSN/MMAC, part number, or any other way of identifying a particular item. MIL-STD-2073-1 represents Military Preservation (PRES) and Packing (PACK). Military packing consists of levels A, B, and Minimum (M). ASTM D3951 could be substituted by another document if specified in Block 2. Quantity Per Unit Pack (QUP) and Commercial Best Practice (CBP) are abbreviated. The reverse side of this form has the European Union environmental requirements.

ITEM ID	QUP (#)	MIL-STD-2073-1 PRES (X)	MIL-STD-2073-1 PACK (A/B/M)	COMMERCIAL ASTM D3951 PRES (X)	COMMERCIAL ASTM D3951 PACK (X)	CBP (X)	SPECIAL PACKAGING INSTRUCTION NUMBER
1620012964328 0018	001	X	B				
1620014423188 0019	001	X	B				
1620010710534 0020	001	X	B				F010710534 99088

2. ADDITIONAL PACKAGING AND CONTAINER MARKING REQUIREMENTS *(Specify all revisions and dates of required specifications, standards, and data item descriptions (DIDs))*

3. INSTRUCTIONS TO CONTRACTING OFFICER: Insert appropriate clause(s) into Section D for applicable item(s) as indicated below.

- X AFMCFARS 5352.247-9005, SHIPPING CONTAINER MARKING. ITEM NAME(s)OR NSN/MMAC
- AFMCFARS 5352.247-9006, MARKING OF WARRANTED ITEMS. ITEM NAME(s) OR NSN/MMAC
- AFMCFARS 5352.247-9007, SPECIFICATION COMMERCIAL PACKAGING (ASTM D3951). ITEM NAME(s) OR NSN/MMAC
- AFMCFARS 5352.247-9008, CONTRACTOR COMMERCIAL PACKAGING *(Commercial Best Practice)*. ITEM NAME(s) OR NSN/MMAC
- X AFMCFARS 5352.247-9009, MILITARY PACKAGING AND MARKING. ITEM NAME(s) OR NSN/MMAC
- AFMCFARS 5352.247-9010, ENGINEERED OR SPECIALIZED CONTAINERS (CDRS). ITEM NAME(s) OR NSN/MMAC
- AFMCFARS 5352.247-9011, PACKAGING AND MARKING OF HAZARDOUS MATERIAL. ITEM NAME(s) OR NSN/MMAC
- AFMCFARS 5352.247-9013, PACKAGING DATA *(Coded and/or Special Packaging Instructions)*. ITEM NAME(s) OR NSN/MMAC

4. CODED DATA: Coded requirements shall be interpreted in accordance with MIL-STD-2073-1.

ITEM	QUANTITY QUP	QUANTITY ICQ	PRES METH	CD	PRES MTL	WRAP MTL	CUSH DUNN	CT	UNIT CONT	INT CON	UCL	SPEC MKG	UNIT PACK WEIGHT	UNIT PACK SIZE LENGTH	UNIT PACK SIZE WIDTH	UNIT PACK SIZE DEPTH	UNIT PACK CUBE WHOLE CUBE	UNIT PACK CUBE 1000TH	OPI
1620012964328 0018	001	000	20	1	02	GB	GT	X	Ed	00	B	00	00120	0063	0063	0245	00005	620	
1620014423188 0019	001	000	20	1	02	GB	BG	X	EE	00	B	00	00048	0063	0063	0065	00001	490	

ORGANIZATION: LGMPA

PACKAGING SPECIALIST *(Typed Name/Signature)*: Mike Stephens

DATE: 2003/7/8

AFMC FORM 158, 20030408 *(EF-V1)*

PREVIOUS EDITION IS OBSOLETE

SEE REVERSE SIDE

PACKAGING REQUIREMENTS

PR, MIPR, OR DOCUMENT NUMBER FD2020-03-23066

1. PACKAGING REQUIREMENTS: Block 1 shall always be completed and further defined in Blocks 2, 3, or 4. The term "Item ID" refers to line item number, item name, NSN/MMAC, part number, or any other way of identifying a particular item. MIL-STD-2073-1 represents Military Preservation (PRES) and Packing (PACK). Military packing consists of levels A, B, and Minimum (M). ASTM D3951 could be substituted by another document if specified in Block 2. Quantity Per Unit Pack (QUP) and Commercial Best Practice (CBP) are abbreviated. The reverse side of this form has the European Union environmental requirements.

ITEM ID	QUP (#)	MIL-STD-2073-1 PRES (X)	MIL-STD-2073-1 PACK (A/B/M)	COMMERCIAL ASTM D3951 PRES (X)	COMMERCIAL ASTM D3951 PACK (X)	CBP (X)	SPECIAL PACKAGING INSTRUCTION NUMBER
1620011349231 0022	001	X	B				F000110192 91035
1620001275785 0023	001	X	B				
1620000071791 0024	001	X	B				F000071791 99202

2. ADDITIONAL PACKAGING AND CONTAINER MARKING REQUIREMENTS *(Specify all revisions and dates of required specifications, standards, and data item descriptions (DIDs))*

3. INSTRUCTIONS TO CONTRACTING OFFICER: Insert appropriate clause(s) into Section D for applicable item(s) as indicated below.

- [X] AFMCFARS 5352.247-9005, SHIPPING CONTAINER MARKING. ITEM NAME(s)OR NSN/MMAC
- [ ] AFMCFARS 5352.247-9006, MARKING OF WARRANTED ITEMS. ITEM NAME(s) OR NSN/MMAC
- [ ] AFMCFARS 5352.247-9007, SPECIFICATION COMMERCIAL PACKAGING (ASTM D3951). ITEM NAME(s) OR NSN/MMAC
- [ ] AFMCFARS 5352.247-9008, CONTRACTOR COMMERCIAL PACKAGING *(Commercial Best Practice)*. ITEM NAME(s) OR NSN/MMAC
- [X] AFMCFARS 5352.247-9009, MILITARY PACKAGING AND MARKING. ITEM NAME(s) OR NSN/MMAC
- [ ] AFMCFARS 5352.247-9010, ENGINEERED OR SPECIALIZED CONTAINERS (CDRS). ITEM NAME(s) OR NSN/MMAC
- [ ] AFMCFARS 5352.247-9011, PACKAGING AND MARKING OF HAZARDOUS MATERIAL. ITEM NAME(s) OR NSN/MMAC
- [ ] AFMCFARS 5352.247-9013, PACKAGING DATA *(Coded and/or Special Packaging Instructions)*. ITEM NAME(s) OR NSN/MMAC

4. CODED DATA: Coded requirements shall be interpreted in accordance with MIL-STD-2073-1.

ITEM	QUANTITY QUP	QUANTITY ICQ	PRES METH	CD	PRES MTL	WRAP MTL	CUSH DUNN	CT	UNIT CONT	INT CON	UCL	SPEC MKG	UNIT PACK WEIGHT	UNIT PACK SIZE LENGTH	UNIT PACK SIZE WIDTH	UNIT PACK SIZE DEPTH	UNIT PACK CUBE WHOLE CUBE	UNIT PACK CUBE 1000TH	OPI
1620001275785	001	000	41	1	00	XX	BG	X	EE	00	B	00	0011	0006	0006	0024	00000	5000	

ORGANIZATION: LGMPA

PACKAGING SPECIALIST *(Typed Name/Signature)*: Mike Stephens

DATE: 2003/7/9

AFMC FORM 158, 20030408 *(EF-V1)* PREVIOUS EDITION IS OBSOLETE

SEE REVERSE SIDE

PACKAGING REQUIREMENTS

PR, MIPR, OR DOCUMENT NUMBER FD2020-03-23066

1. PACKAGING REQUIREMENTS: Block 1 shall always be completed and further defined in Blocks 2, 3, or 4. The term "Item ID" refers to line item number, item name, NSN/MMAC, part number, or any other way of identifying a particular item. MIL-STD-2073-1 represents Military Preservation (PRES) and Packing (PACK). Military packing consists of levels A, B, and Minimum (M). ASTM D3951 could be substituted by another document if specified in Block 2. Quantity Per Unit Pack (QUP) and Commercial Best Practice (CBP) are abbreviated. The reverse side of this form has the European Union environmental requirements.

ITEM ID	QUP (#)	MIL-STD-2073-1 PRES (X)	MIL-STD-2073-1 PACK (A/B/M)	COMMERCIAL ASTM D3951 PRES (X)	COMMERCIAL ASTM D3951 PACK (X)	CBP (X)	SPECIAL PACKAGING INSTRUCTION NUMBER
1620002640745 0026	001	X	B				
1620009440417 0027	001	X	B				F012574042 01320
1620002640750 0028							F000110192 91035

2. ADDITIONAL PACKAGING AND CONTAINER MARKING REQUIREMENTS *(Specify all revisions and dates of required specifications, standards, and data item descriptions (DIDs))*

3. INSTRUCTIONS TO CONTRACTING OFFICER: Insert appropriate clause(s) into Section D for applicable item(s) as indicated below.

- [X] AFMCFARS 5352.247-9005, SHIPPING CONTAINER MARKING. ITEM NAME(s)OR NSN/MMAC
- [ ] AFMCFARS 5352.247-9006, MARKING OF WARRANTED ITEMS. ITEM NAME(s) OR NSN/MMAC
- [ ] AFMCFARS 5352.247-9007, SPECIFICATION COMMERCIAL PACKAGING (ASTM D3951). ITEM NAME(s) OR NSN/MMAC
- [ ] AFMCFARS 5352.247-9008, CONTRACTOR COMMERCIAL PACKAGING *(Commercial Best Practice)*. ITEM NAME(s) OR NSN/MMAC
- [X] AFMCFARS 5352.247-9009, MILITARY PACKAGING AND MARKING. ITEM NAME(s) OR NSN/MMAC
- [ ] AFMCFARS 5352.247-9010, ENGINEERED OR SPECIALIZED CONTAINERS (CDRS). ITEM NAME(s) OR NSN/MMAC
- [ ] AFMCFARS 5352.247-9011, PACKAGING AND MARKING OF HAZARDOUS MATERIAL. ITEM NAME(s) OR NSN/MMAC
- [ ] AFMCFARS 5352.247-9013, PACKAGING DATA *(Coded and/or Special Packaging Instructions)*. ITEM NAME(s) OR NSN/MMAC

4. CODED DATA: Coded requirements shall be interpreted in accordance with MIL-STD-2073-1.

ITEM	QUANTITY QUP	QUANTITY ICQ	PRES METH	CD	PRES MTL	WRAP MTL	CUSH DUNN	CT	UNIT CONT	INT CON	UCL	SPEC MKG	UNIT PACK WEIGHT	UNIT PACK SIZE LENGTH	UNIT PACK SIZE WIDTH	UNIT PACK SIZE DEPTH	UNIT PACK CUBE WHOLE CUBE	UNIT PACK CUBE 1000TH	OPI
1620002640745 0026	001	000	20	1	99	G8	BG	X	E4	00	B	00	0081	070	305	8125	006	58	0014340

ORGANIZATION LGMPA

PACKAGING SPECIALIST *(Typed Name/Signature)* Mike Stephens

DATE 2003/7/8

AFMC FORM 158, 20030408 *(EF-V1)*

PREVIOUS EDITION IS OBSOLETE

SEE REVERSE SIDE

PACKAGING REQUIREMENTS

PR, MIPR, OR DOCUMENT NUMBER FD2020-03-23866

1. PACKAGING REQUIREMENTS: Block 1 shall always be completed and further defined in Blocks 2, 3, or 4. The term "Item ID" refers to line item number, item name, NSN/MMAC, part number, or any other way of identifying a particular item. MIL-STD-2073-1 represents Military Preservation (PRES) and Packing (PACK). Military packing consists of levels A, B, and Minimum (M). ASTM D3951 could be substituted by another document if specified in Block 2. Quantity Per Unit Pack (QUP) and Commercial Best Practice (CBP) are abbreviated. The reverse side of this form has the European Union environmental requirements.

ITEM ID	QUP (#)	MIL-STD-2073-1 PRES (X)	MIL-STD-2073-1 PACK (A/B/M)	COMMERCIAL ASTM D3951 PRES (X)	COMMERCIAL ASTM D3951 PACK (X)	CBP (X)	SPECIAL PACKAGING INSTRUCTION NUMBER
1620004176249 0030	001	X	B				F004176249 88347
1620001954910 0032	001	X	B				F001954910 85343

2. ADDITIONAL PACKAGING AND CONTAINER MARKING REQUIREMENTS *(Specify all revisions and dates of required specifications, standards, and data item descriptions (DIDs))*

3. INSTRUCTIONS TO CONTRACTING OFFICER: Insert appropriate clause(s) into Section D for applicable item(s) as indicated below.

- [X] AFMCFARS 5352.247-9005, SHIPPING CONTAINER MARKING. ITEM NAME(s)OR NSN/MMAC
- [ ] AFMCFARS 5352.247-9006, MARKING OF WARRANTED ITEMS. ITEM NAME(s) OR NSN/MMAC
- [ ] AFMCFARS 5352.247-9007, SPECIFICATION COMMERCIAL PACKAGING (ASTM D3951). ITEM NAME(s) OR NSN/MMAC
- [ ] AFMCFARS 5352.247-9008, CONTRACTOR COMMERCIAL PACKAGING *(Commercial Best Practice)*. ITEM NAME(s) OR NSN/MMAC
- [X] AFMCFARS 5352.247-9009, MILITARY PACKAGING AND MARKING. ITEM NAME(s) OR NSN/MMAC
- [ ] AFMCFARS 5352.247-9010, ENGINEERED OR SPECIALIZED CONTAINERS (CDRS). ITEM NAME(s) OR NSN/MMAC
- [ ] AFMCFARS 5352.247-9011, PACKAGING AND MARKING OF HAZARDOUS MATERIAL. ITEM NAME(s) OR NSN/MMAC
- [ ] AFMCFARS 5352.247-9013, PACKAGING DATA *(Coded and/or Special Packaging Instructions)*. ITEM NAME(s) OR NSN/MMAC

4. CODED DATA: Coded requirements shall be interpreted in accordance with MIL-STD-2073-1.

ITEM	QUANTITY QUP	QUANTITY ICQ	PRES METH	CD	PRES MTL	WRAP MTL	CUSH DUNN	CT	UNIT CONT	INT CON	UCL	SPEC MKG	UNIT PACK WEIGHT	UNIT PACK SIZE LENGTH	UNIT PACK SIZE WIDTH	UNIT PACK SIZE DEPTH	UNIT PACK CUBE WHOLE CUBE	UNIT PACK CUBE 1000TH	OPI

ORGANIZATION: LGMPD

PACKAGING SPECIALIST *(Typed Name/Signature)*: Mike Stephens

DATE: 2003/7/8

AFMC FORM 158, 20030408 *(EF-V1)*

PREVIOUS EDITION IS OBSOLETE

SEE REVERSE SIDE

PUBLICATION AUTHORITY T.O. 00-858-1

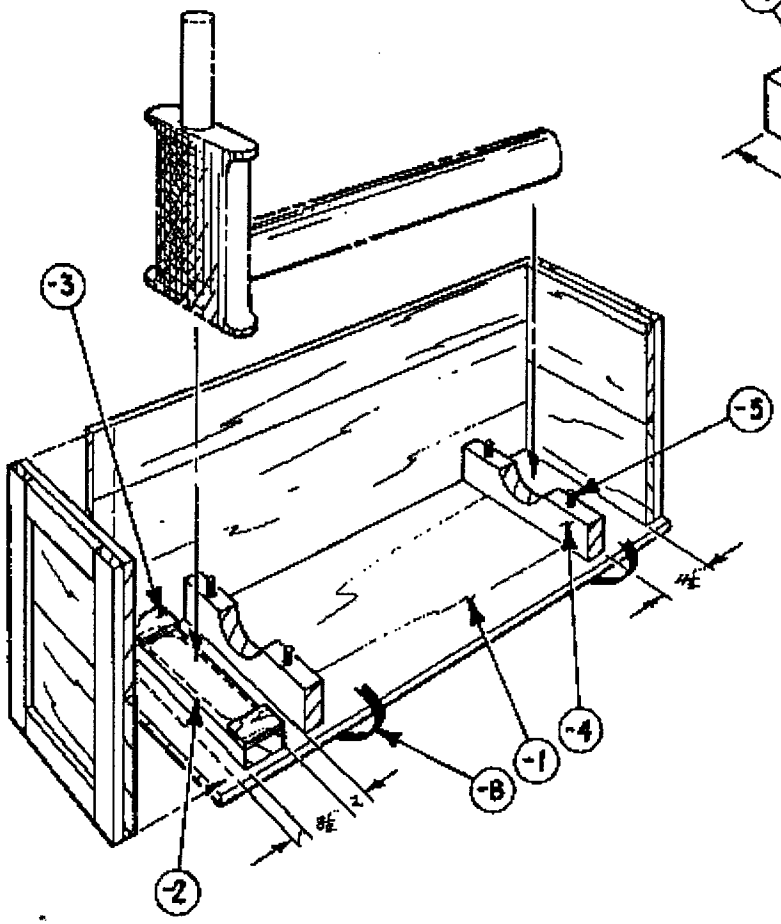

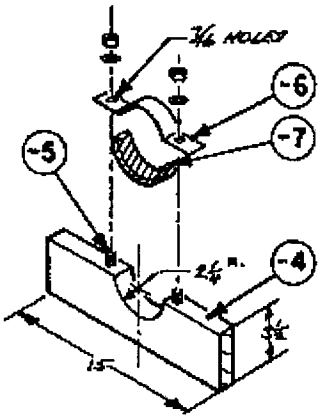

REVISIONS				
ZONE	LTR	DESCRIPTION	DATE	APPROVED
REV	A	THIS DWG SUPERSEDES TPO 01-018-4758 DATED 8-24-78.	78114	[illegible]

PRESERVATION & PACKAGING
LEVEL A IN A/W MIL-P-116 METHOD I
LEVEL B IN A/W MIL-P-116 METHOD I
LEVEL C
CLEANING & DRYING IN A/W MIL-P-116
PRESERVATION COMPOUND SEE NOTE 1.
AMOUNT OF DESICCANT (units) N/A
CLOSURE OR STRAPPING IN A/W PPP-B-621
MARKING IN A/W MIL-STD-129
SPECIAL MARKING [X] APPLICABLE SEE INSTRUCTIONS [ ] NOT APPLICABLE
INSTRUCTIONS: MARK "TPO 01-018-4758" ON ONE SIDE OF CONTAINER.

REF	QTY	DESCRIPTION	SIZE	MATERIAL	SPECIFICATION
-9					
-8	2	STRAPS	.020 x 5/8 x 84	STEEL	QQ-S-781 TYPE I, CL-1, REG. DUTY
-7	2	PADS	3" x AR	POLYPROPYLENE	PPP-C-1797
-6	2	HOLD-DOWNS	.035 x 1 1/4 x AR	↓	QQ-S-781 TYPE I, CL-1, HEAVY DUTY
-5	4	BOLTS	3/8 x 5 1/2	STEEL	FF-B-584 TYPE I, CL-1, STYLE A
-4	2	SADDLE BLOCKS	2 x 4 NOM x 15	WOOD	MIL-STD-731, CL-2
-3	2	BLOCKS	1/2 X 2 X 3 1/2	PLYWOOD	NN-P-530, STD GR, EXT GLUE
-2	1	BLOCK	2 x 4 NOM x 15	↓	MIL-STD-731, CL-2
-1	1	BOX	39 x 15 x 20	WOOD	PPP-B-621

EXTERIOR CONTAINER		LIST OF MATERIALS						GROSS	
LEVEL	SPECIFICATION	SIZE I.D.	STYLE	TYPE	CLASS	VARIETY	GRADE	WT	CU
A	PPP-B-621	39 x 15 x 20	2					106	8.64
B	↓	↓	↓					↓	↓
C									
AIR									

NET WT 56 OUTSIDE DIMENSIONS 42 x 16 1/2 x 21 1/2

QTY REQD	SYM	NOMENCLATURE	CODE IDENT.	IDENTIFYING NO.	SPECIFICATION	MATERIAL	UNIT WT	ZONE	FIND NO.

LIST OF MATERIALS

NOTES:
1. MIL-C-16173, GRADE 2 SHALL BE APPLIED TO AXLES, CYLINDERS, AND BUSHINGS, AND MIL-G-23827 TO BEARINGS. TREATED PARTS SHALL BE COVERED WITH MIL-B-121 BARRIER SECURED WITH TAPE, PPP-T-60.

2. PADS, POLYPROPYLENE, PPP-C-1797, OR EQUAL SHALL BE USED AT ALL POINTS OF CONTACT WITH WOOD BLOCKING AND METAL STRAPPING.

3. TIE DOWN STRAPS SHALL BE .035 X 1 1/4 X AR CONFORMING TO SPECIFICATION QQ-S-731, TYPE I, CLASS A. LENGTH AS REQUIRED. HOLES SHALL BE 7/16 INCH DIAMETER.

UNLESS OTHERWISE SPECIFIED DIMENSIONS ARE IN INCHES
TOLERANCES ON FRACTIONS ± DECIMALS .XX ± .XXX ± ANGLES ±

MATERIAL

DRAFTSMAN [signature] DATE 78114
CHECKER
ENGINEER [signature] 78114
PROJ ENGR [signature] 78114
CONTRACT NUMBER
U.S. AIR FORCE
OGDEN ALC HILL AFB UTAH
TITLE
PISTON
SIZE C
DRAWING NUMBER TPO 01-018-4758
SCALE 1620
SHEET 1 OF 1

ENGINEERING DRAWING LAYOUT C

SPECIAL PACKAGING INSTRUCTION

CODE ID	SPI NO. (TPO)
98747	F01-017-6680
	SHEET 1 OF 4

PART OR DRAWING NO.	NATIONAL STOCK NO.	CURRENT REV	ILL. C. CHARBONEAU
18797-1	1620-01-017-6680	B	CHK. T. ZIMMERMAN
ITEM NOMENCLATURE		ORIGINAL DATE	ENGR. M. STEPHENS
CYLINDER ASSEMBLY / AC-A10		76170	AUTH. P. FRANCIS

MILITARY PRESERVATION IAW MIL-STD-2073

SERVICEABLE METHOD: 20
UNSERVICEABLE METHOD: 20

QUP 001
ICQ 000

CLEANING & DRYING: IAW MIL-STD-2073

PRESERVATIVE: MIL-PRF-16173, GRADE 2

MARKING IAW MIL-STD-129

SPECIAL MARKINGS:

A) SPI NO. F01-017-6680
*MARK THE SPI NUMBER ON ONE SIDE OF THE CONTAINER.

B) MARK REUSEABLE CONTAINER DO NOT DESTROY.

CLOSURE

LEVEL A: IAW ASTM-D6251
LEVEL B: IAW ASTM-D6251

SEE NOTES PAGE 2.

PACKING AS SPECIFIED BELOW AND BILL OF MATERIALS

LEVEL	SPEC	STYLE	TYPE	CL	VRTY	GR	TR
A	ASTM-D6251	A	III	2			B
B	ASTM-D6251	A	III	1			A

	LEVEL A	LEVEL B
GROSS CU FT	8.87	8.87
GROSS WT LBS	93.0	93.0
DESIGN FRAGILITY G	110	110

	LENGTH	WIDTH	DEPTH
CNTR I.D.	42 1/2	19 1/2	13 1/2
CNTR O.D.			
LEVEL A:	44 3/4	21 3/4	15 3/4
LEVEL B:	44 3/4	21 3/4	15 3/4
ITEM DIM	41	15	5 1/2
ITEM WT.	45.0 LBS.		

REVISIONS		
LTR	DESCRIPTION	DATE
A	CHANGE CONTAINER & UPDATED	99109
B	ADD WOOD STATEMENT & UPDATE	03111

P/N	QTY REQD	NOMENCLATURE DESCRIPTION	SIZE (INCHES UNLESS SPECIFIED)	MATERIAL SPECIFICATION
-8	A/R	TAPE	3/4 X A/R	A-A-883 TYPE I OR II
-7	A/R	WRAP	A/R	MIL-PRF-121 GRADE A
-6	1	SUPPORT, LOWER (SEE DETAIL B)	19 1/2 X 5 3/4 X 1 1/2	ASTM-D4727 CF, DOM, TW, GR 1100
-5	1	SUPPORT, UPPER (SEE DETAIL B)	19 1/2 X 7 3/4 X 1 1/2	ASTM-D4727 CF, DOM, TW, GR 1100
-4	1	SUPPORT, LOWER (SEE DETAIL A)	19 1/2 X 7 1/2 X 1 1/2	ASTM-D4727 CF, DOM, TW, GR 1100
-3	1	SUPPORT, UPPER (SEE DETAIL A)	19 1/2 X 6 X 1 1/2	ASTM-D4727 CF, DOM, TW, GR 1100
-2	2	END PADS	19 1/2 X 13 1/2 X 1/2 TW	ASTM-D4727 CF, DOM, TW, GR 1100
-1	8	INSIDE CLEATS	1 X 3 (NOM) X 13 1/2	ASTM-D6199 CLASS 2

SPI NO. F01-017-6680

EUROPEAN UNION (EU) REQUIREMENTS NOTICES

NOTICE 1: LUMBER AND PACKAGING/CONTAINER STATEMENT – "ALL WOODEN LUMBER CONTAINERS PRODUCED ENTIRELY OR IN PART OF NON-MANUFACTURED SOFTWOOD SPECIES SHALL BE CONSTRUCTED FROM HEAT TREATED (HT) MATERIAL (HT TO 56 DEGREES CENTIGRADE OR 133 DEGREES FAHRENHEIT FOR 30 MINUTES). CERTIFICATION IS REQUIRED BY AN ACCREDITED AGENCY RECOGNIZED BY THE AMERICAN LUMBER STANDARDS COMMITTEE (ALSC). CONSTRUCTION AND CERTIFICATION SHALL BE IN ACCORDANCE WITH NON-MANUFACTURED WOOD PACKING POLICY AND NON-MANUFACTURED WOOD PACKING ENFORCEMENT REGULATIONS, BOTH DATED MAY 30, 2001." THESE DOCUMENTS CAN BE FOUND AT WWW.APHIS.USDA.GOV.

NOTICE 2: WOODEN PALLET STATEMENT – "ALL WOODEN PALLETS PRODUCED ENTIRELY OR IN PART OF NON-MANUFACTURED SOFTWOOD SPECIES SHALL BE CONSTRUCTED FROM HEAT TREATED (HT) MATERIAL (HT TO 56 DEGREES CENTIGRADE OR 133 DEGREES FAHRENHEIT FOR 30 MINUTES). CERTIFICATION IS REQUIRED BY AN ACCREDITED AGENCY RECOGNIZED BY THE AMERICAN LUMBER STANDARDS COMMITTEE (ALSC). CONSTRUCTION AND CERTIFICATION SHALL BE IN ACCORDANCE WITH NON-MANUFACTURED WOOD PACKING POLICY AND NON-MANUFACTURED WOOD PACKING ENFORCEMENT REGULATIONS, BOTH DATED MAY 30, 2001." THESE DOCUMENTS CAN BE FOUND AT WWW.APHIS.USDA.GOV.

NOTICE 3: HARDWOOD SPECIES STATEMENT – "ALL WOODEN PALLETS PRODUCED ENTIRELY OF NON-MANUFACTURED HARDWOOD SPECIES SHALL BE IDENTIFIED BY A PERMANENT MARKING OF "NC" (NON-CONIFEROUS), 1.25 INCHES OR GREATER IN HEIGHT, ACCOMPANIED BY THE CAGE CODE OF THE CONTRACTED MANUFACTURER AND THE MONTH AND YEAR OF THE CONTRACT. ON PALLETS, THE MARKING SHALL BE APPLIED TO THE STRINGER OR BLOCK ON OPPOSITE SIDES AND ENDS OF THE PALLET AND BE CONTRASTING AND CLEARLY VISIBLE."

NOTES

1. COAT MACHINED SURFACES MADE OF STEEL WITH MIL-PRF-16173, GRADE 2. WRAP ITEM WITH REF -7. TAPE WRAP IN PLACE WITH REF -8, TAPE AS REQUIRED.

2. NAIL CLEATS, REF -1, INTO THE POSITIONS SHOWN IN THE CONTAINER USING ANY SUITABLE NAILS OR STAPLES THAT MEET ASTM-F1667. THE NAILS ARE REQUIRED TO BE DEEP ENOUGH THAT THE CLEATS WILL NOT COME OFF. CLINCHED NAILS ARE THE BEST. INSERT THE END PADS, REF -2, WHERE SHOWN. INSERT LOWER SUPPORTS, REF -4 AND -6 INTO THE SLOTS BETWEEN THE CLEATS AS SHOWN. PLACE THE PRESERVED AND WRAPPED CYLINDER ASSEMBLY INTO THE LOWER SUPPORTS AND SECURE INTO POSITION BY INSERTING UPPER SUPPORTS, REF -3 AND -5. EXTRA END PADS CAN BE USED TO ENSURE THERE IS NO MOVEMENT END TO END OF THE CYLINDER. CLOSE AS REQUIRED.

3. ALTERNATE TRIPLE WALL FLUTE DIRECTION ON FIBERBOARD WHEN MAKING SUPPORTS, REF -3, -4, -5 AND -6. THIS GIVES THE SUPPORTS STRENGTH IN BOTH DIRECTIONS.

4. ASSETS PACKAGED IN ACCORDANCE WITH PREVIOUS EDITIONS OF THIS SPI DO NOT REQUIRE REPACKAGING, UNLESS THE SPI NO LONGER PROVIDES PROTECTION FOR THE ASSET.

SPECIAL PACKAGING INSTRUCTION	CODE ID 98747	SPI NO. (TPO) F01-017-6680
ITEM NOMENCLATURE CYLINDER ASSEMBLY / AC-A10		SHEET 3 OF 4

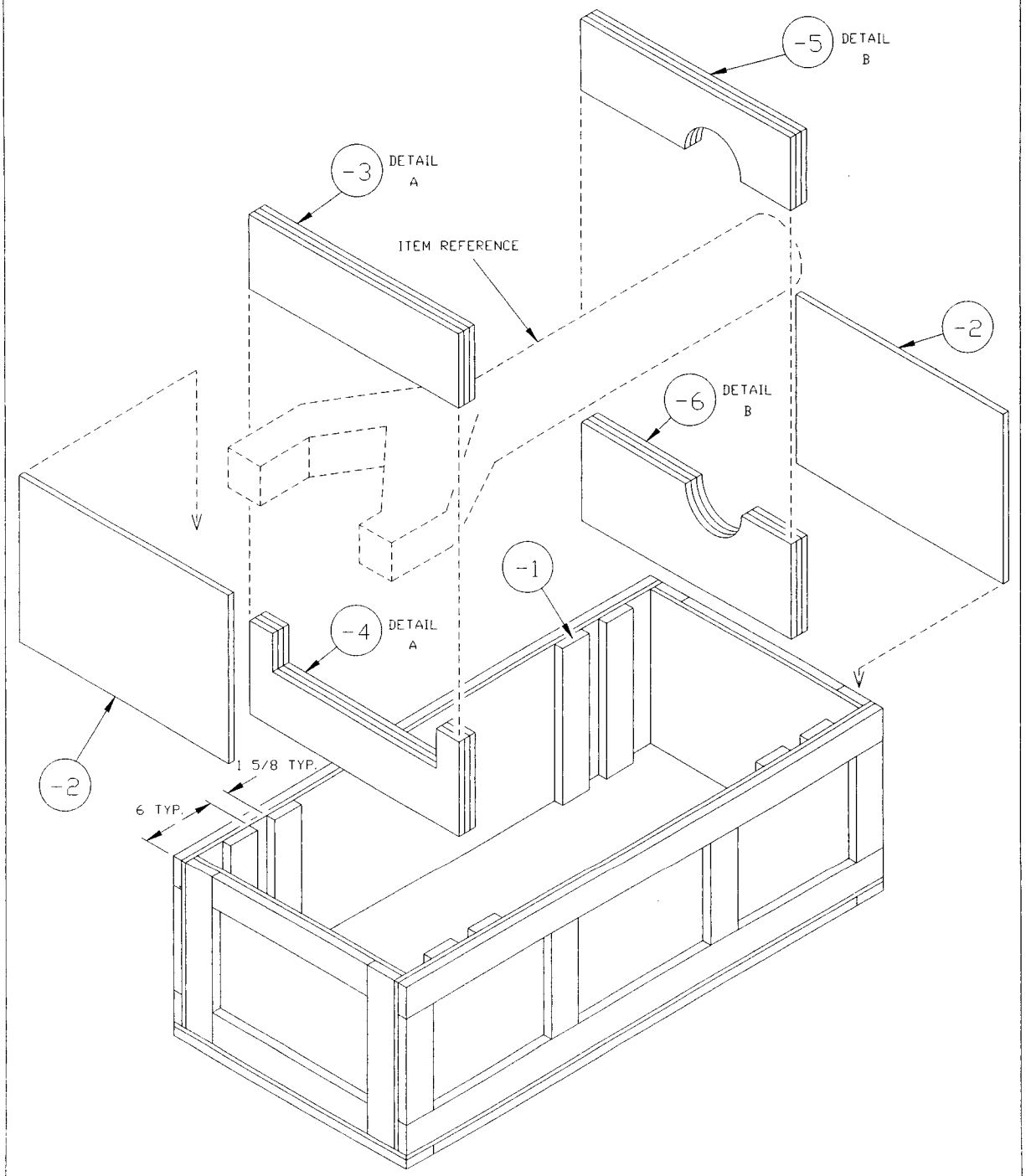

DD FORM MARCH 87 2169 MOD

COMPUTER GENERATED

SPECIAL PACKAGING INSTRUCTION	CODE ID 98747	SPI NO. (TPO) F01-017-6680
ITEM NOMENCLATURE CYLINDER ASSEMBLY / AC-A10		SHEET 4 OF 4

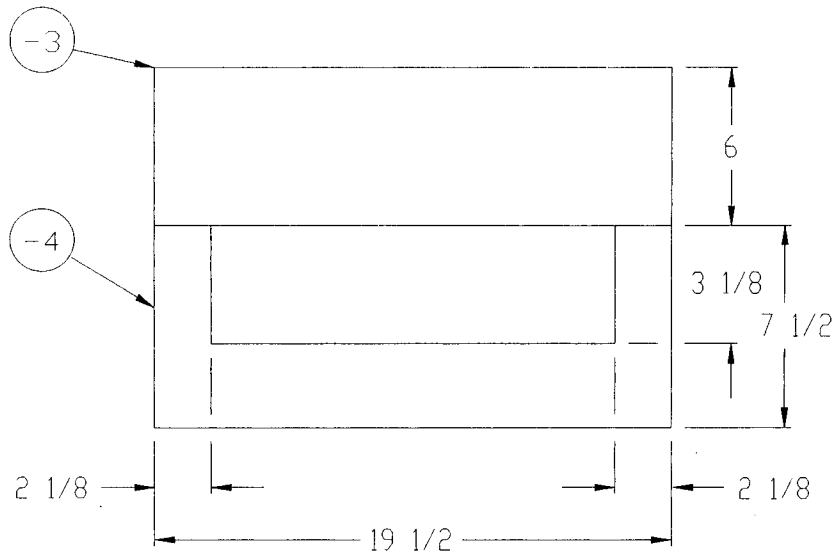

DETAIL A

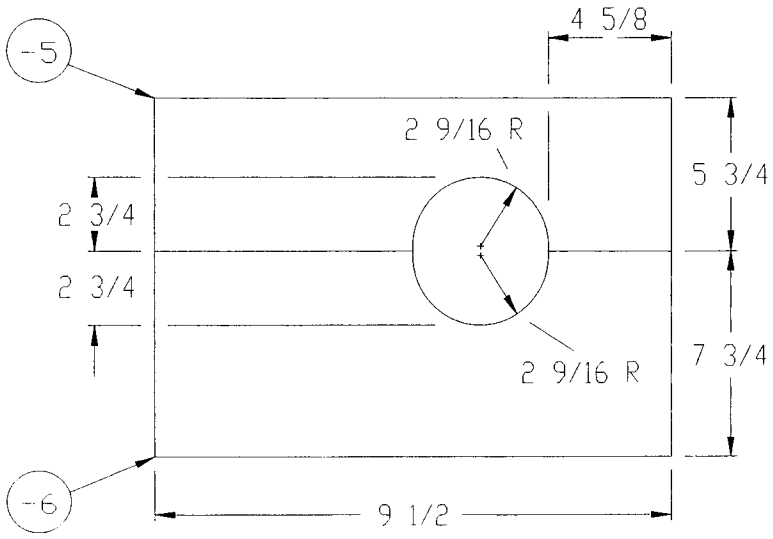

DETAIL B

SPECIAL PACKAGING INSTRUCTION

CODE ID	SPI NO. (TPD)
98747	00-310-9830
	SHEET 1 OF 3

PART OR DRAWING NO.	NATIONAL STOCK NO.	CURRENT REV
68A450602-1001	1620-00-310-9830	

ITEM NOMENCLATURE: CYLINDER, LANDING GEAR

ORIGINAL DATE: 88336

ILL. E. NYE E. Nye
CHK. F. LANDERS F. Landers
ENGR. M. MEDINA M. Medina
AUTH. B. EVANS B. Evans

PRESERVATION IAW MIL-P-116
- LEVEL A METHOD I
- LEVEL B METHOD I
- LEVEL C METHOD I
- QUP 001
- ICQ 000
- CLEANING METHOD C-1
- DRYING METHOD D-1
- PRESERVATIVE MIL-C-16173, GR 2

MARKING IAW MIL-STD-129

SPECIAL MARKINGS:
A) SPI NO. 00-310-9830 MARK THE SPI NUMBER ON ONE SIDE OF THE CONTAINER AND ON ALL REMOVABLE DUNNAGE.

PACKING AS SPECIFIED BELOW AND BILL OF MATERIALS

LEVEL	SPEC	STYLE	TYPE	CL	VRTY	GR
A	PPP-B-621(MOD)	4		2		A
B	PPP-B-621(MOD)	4		1		B
C	PPP-B-621(MOD)	4		1		B

	LEVEL A	LEVEL B	LEVEL C
GROSS CU FT	6.087	6.087	6.087
GROSS WT LBS	67	67	67
DESIGN FRAGILITY G	110	110	110

	LENGTH	WIDTH	DEPTH
CNTR I.D.	39 1/2	19 1/8	11
CNTR O.D.	42 1/2	20 5/8	12
ITEM DIM	36 1/2	15 1/4	9

ITEM WT LBS 26

REVISIONS			
LTR	DESCRIPTION	DATE	APRVD

CLOSURE IN ACCORDANCE WITH PPP-B-621

NOTES:
1. PRESERVE CRITICAL AREAS AND WRAP WITH -9 USING -10 TO SECURE WRAP.
2. SECURE -8 TO CONTAINER AND -2 & -3 TO -4 USING 4d NAILS CONFORMING TO FF-N-105, TYPE II, STYLE 4A OR EQUAL.

P/N	QTY REQD	NOMENCLATURE OR DESCRIPTION	SIZE (INCHES UNLESS SPECIFIED)	MATERIAL SPECIFICATION
-11	3	CHAFFING STRIP	AS REQUIRED X 3 X 1/2	PPP-P-115 TYPE I OR EQUAL
-10	A/R	NYLON TAPE	AS REQUIRED X 1/2	PPP-T-97 TYPE III
-9	6	WRAP	AS REQUIRED	MIL-B-121 TYPE I, GR A, CL 2
-8	8	SADDLE BRACES	1 X 3(NOM) X 11	MIL-STD-731 CLASS 2
-7	1	SADDLE	2 X 6(NOM) X 19	MIL-STD-731 CLASS 2
-6	1	SADDLE	19 X 4 1/2 X 1 1/2	MIL-STD-731 CLASS 2
-5	1	SADDLE	19 X 6 1/2 X 1 1/2	MIL-STD-731 CLASS 2
-4	1	SADDLE	19 X 5 1/2 X 3/4	NN-P-530 GROUP B
-3	1	SADDLE SUPPORT	5 1/2 X 4 1/2 X 3/4	NN-P-530 GROUP B
-2	1	SADDLE SUPPORT	9 X 5 1/2 X 3/4	NN-P-530 GROUP B
-1	2	TOP & BOTTOM	41 X 20 5/8 X 1/2	NN-P-530 GROUP B

SPI NO. 00-310-9830

DD FORM 2169 MOD

COMPUTER GENERATED

SPECIAL PACKAGING INSTRUCTION	C... ID .98747	SPI NO. (TPD) 00-310-9830
ITEM NOMENCLATURE CYLINDER, LANDING GEAR		SHEET 2 OF 3

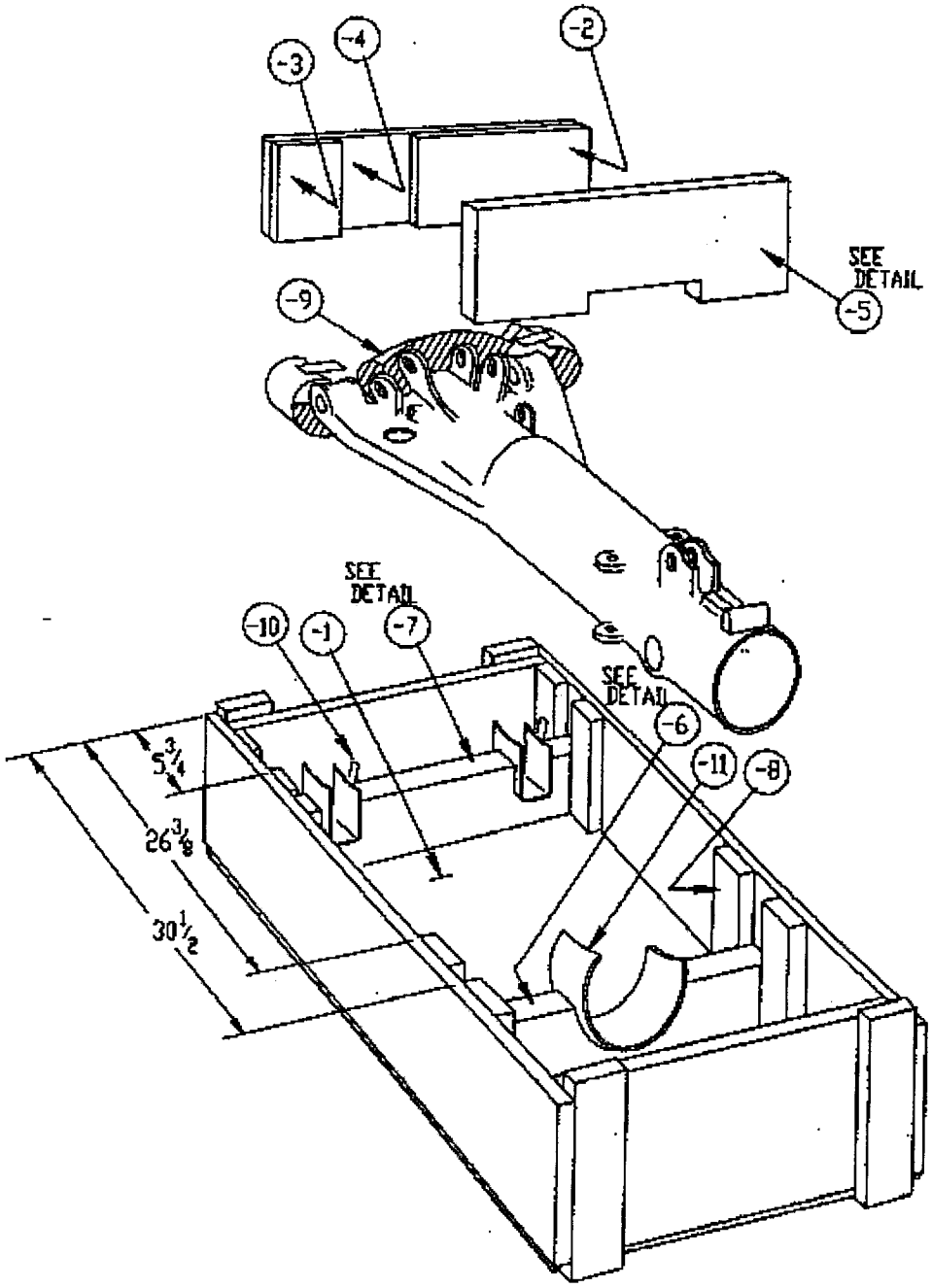

DD FORM 2169c MOD

COMPUTER GENERATED

SPECIAL PACKAGING INSTRUCTION	98747	00-310-9830
ITEM NOMENCLATURE CYLINDER, LANDING GEAR		SHEET 3 OF 3

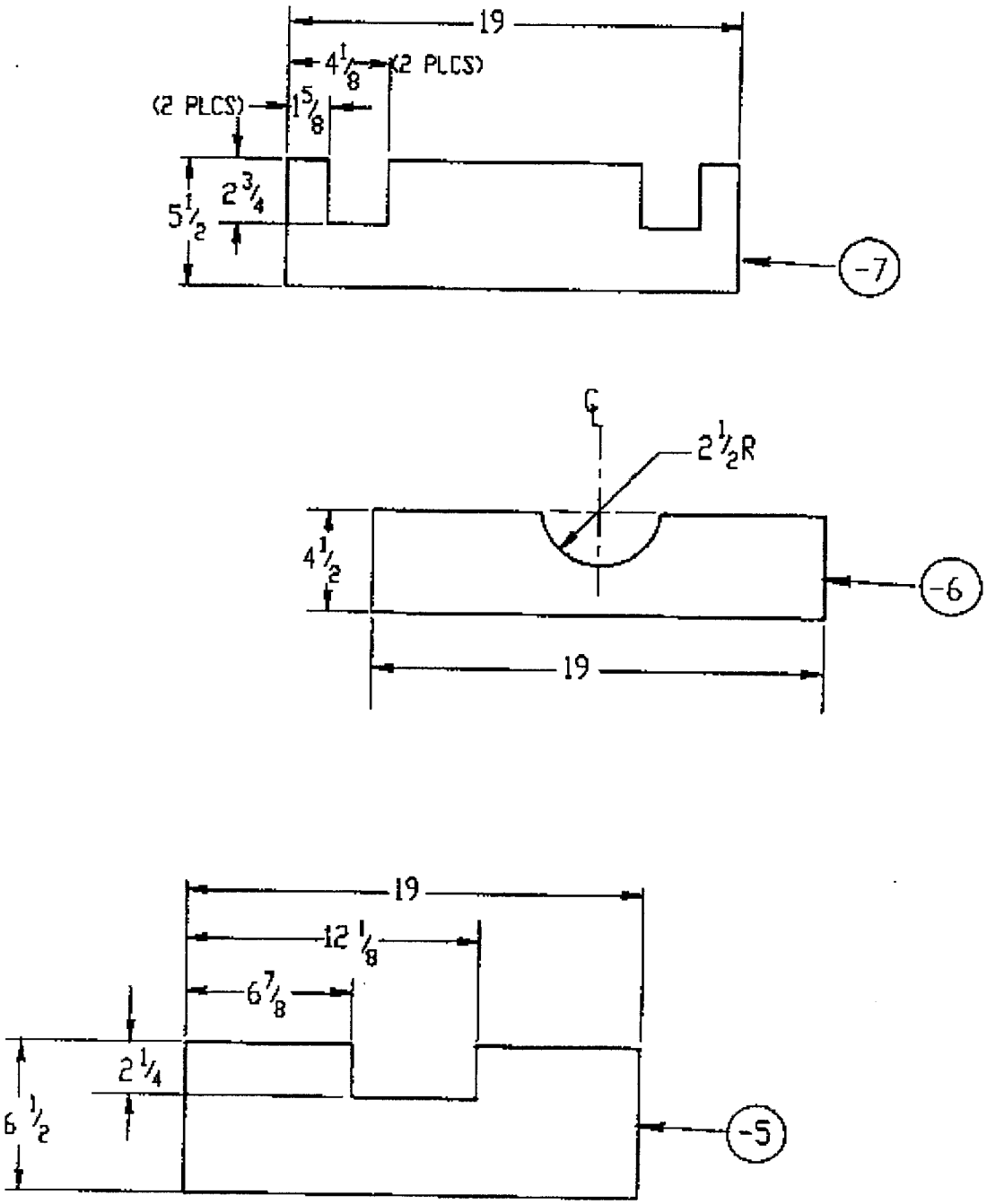

SPECIAL PACKAGING INSTRUCTION

CE ID	98747
SPI NO. (TPO)	01-233-2153
SHEET 1 OF 3	

PART OR DRAWING NO.	NATIONAL STOCK NO.	CURRENT REV
68A452602-1001	1620-01-233-2153	

ILL. E. NYE
CHK. S. MEIER
ENGR. M. MEDINA
AUTH. B. EVANS

ITEM NOMENCLATURE: CYLINDER ASSEMBLY

ORIGINAL DATE: 89129

PRESERVATION IAW MIL-P-116
- LEVEL A METHOD I
- LEVEL B METHOD I
- LEVEL C METHOD I
- QUP 001
- ICQ 000
- CLEANING METHOD C-1
- DRYING METHOD D-1
- PRESERVATIVE MIL-G-81322 OR EQUAL

MARKING IAW MIL-STD-129

SPECIAL MARKINGS:
A) SPI NO. 01-233-2153 MARK THE SPI NUMBER ON ONE SIDE OF THE CONTAINER AND ON ALL REMOVABLE DUNNAGE.

PACKING AS SPECIFIED BELOW AND BILL OF MATERIALS

LEVEL	SPEC	STYLE	TYPE	CL	VRTY	GR
A	PPP-B-621(MOD)	4		2		A
B	PPP-B-621(MOD)	4		1		B
C	PPP-B-621(MOD)	4		1		B

	LEVEL A	LEVEL B	LEVEL C
GROSS CU FT	6.087	6.087	6.087
GROSS WT LBS	80	80	80
DESIGN FRAGILITY G	110	110	110

	LENGTH	WIDTH	DEPTH
CNTR I.D.	39 1/2	19 1/8	11
CNTR O.D.	42 1/2	20 5/8	12
ITEM DIM	36 1/2	15 1/4	9

ITEM WT LBS 37

REVISIONS			
LTR	DESCRIPTION	DATE	APRVD

CLOSURE IN ACCORDANCE WITH PPP-B-621

NOTES:

1. PRESERVE CRITICAL AREAS AND WRAP WITH -8 USING -9 TO SECURE WRAP.

2. SECURE -6 TO CONTAINER USING 4d NAILS CONFORMING TO FF-N-105, TYPE II, STYLE 4A OR EQUAL.

P/N	QTY REQD	NOMENCLATURE OR DESCRIPTION	SIZE (INCHES UNLESS SPECIFIED)	MATERIAL SPECIFICATION
-9	3	CHAFFING STRIP	AS REQUIRED X 3 X 1/2	PPP-P-115 TYPE I OR EQUAL
-8	A/R	NYLON TAPE	AS REQUIRED X 1/2	PPP-T-97 TYPE III
-7	A/R	WRAP	AS REQUIRED	MIL-B-121 TYPE I, GR A, CL 2
-6	8	SADDLE BRACES	1 X 3(NOM) X 11	MIL-STD-731 CLASS 2
-5	1	SADDLE	19 X 6 1/2 X 1 1/2	MIL-STD-731 CLASS 2
-4	1	SADDLE	19 X 5 X 1 1/2	MIL-STD-731 CLASS 2
-3	1	SADDLE	19 X 6 X 1 1/2	MIL-STD-731 CLASS 2
-2	1	SUPPORT	19 X 4 1/4 X 1 1/2	MIL-STD-731 CLASS 2
-1	2	TOP & BOTTOM	41 X 20 5/8 X 1/2	NN-P-530 GROUP B

SPI NO. 01-233-2153

DD FORM 2160 NOV

SPECIAL PACKAGING INSTRUCTION	CODE ID 98747	SPI NO. (TPO) 01-233-2153
ITEM NOMENCLATURE CYLINDER ASSEMBLY		SHEET 2 OF 3

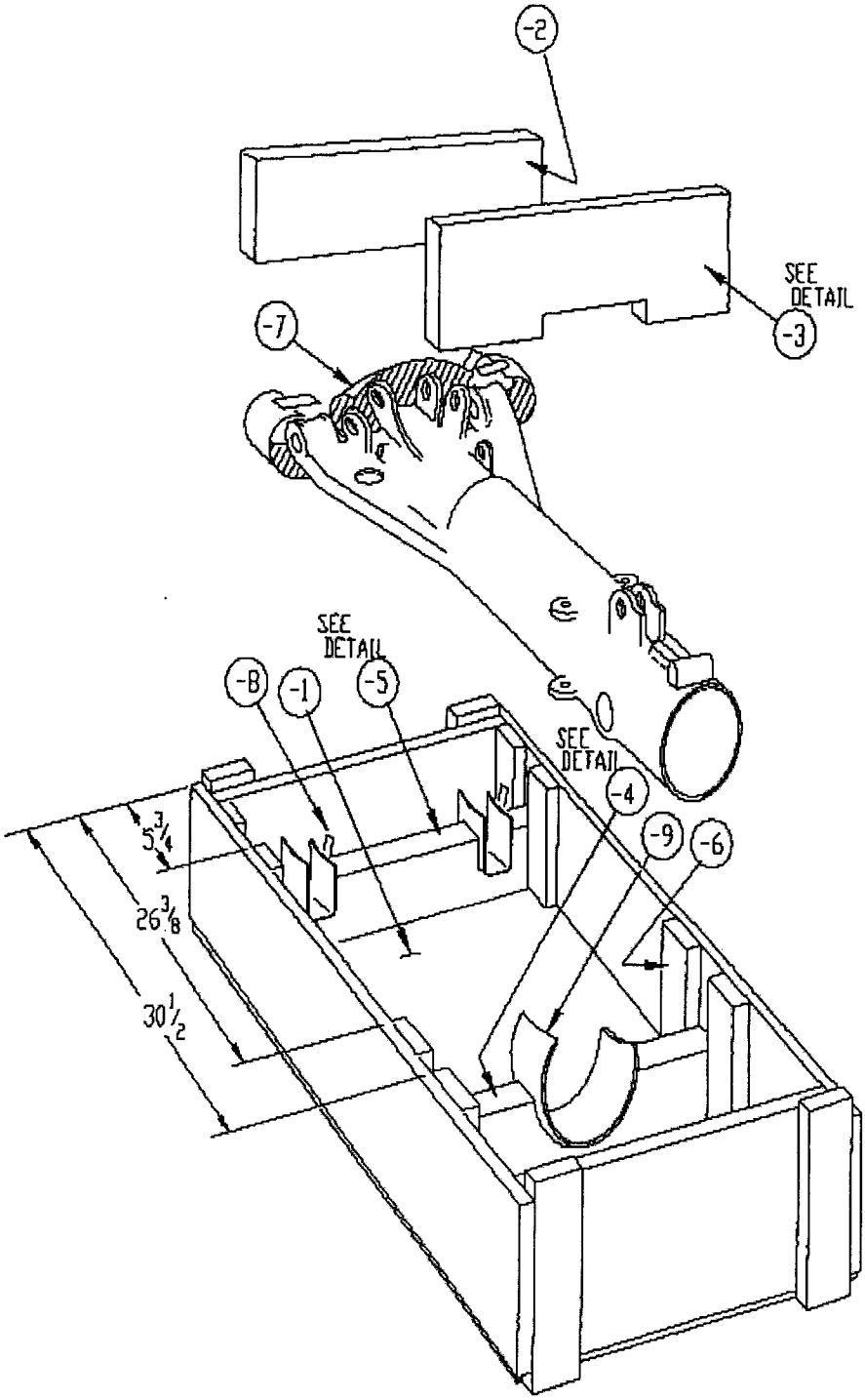

SPECIAL PACKAGING INSTRUCTION	CODE ID 98747	SPI NO. (TFO) 01-203-2153
ITEM NOMENCLATURE CYLINDER ASSEMBLY		SHEET 3 OF 3

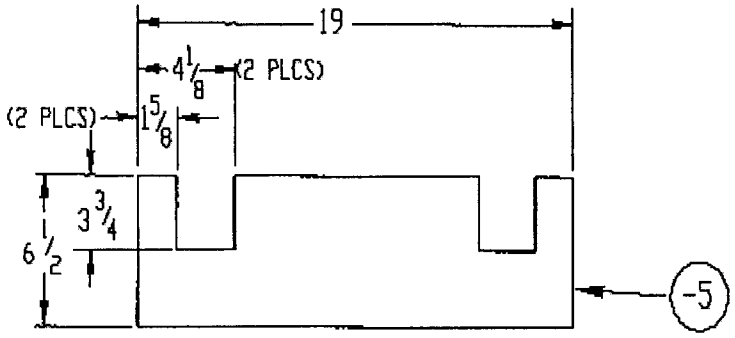

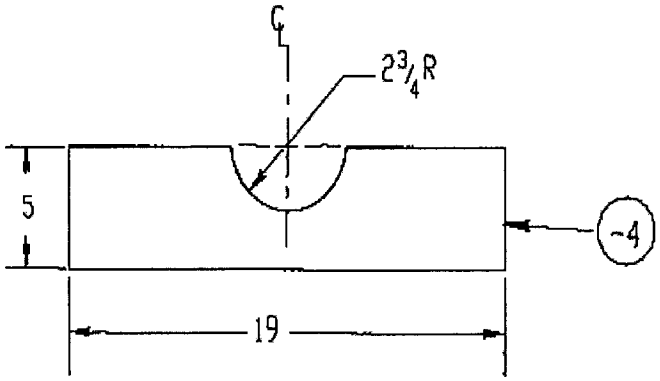

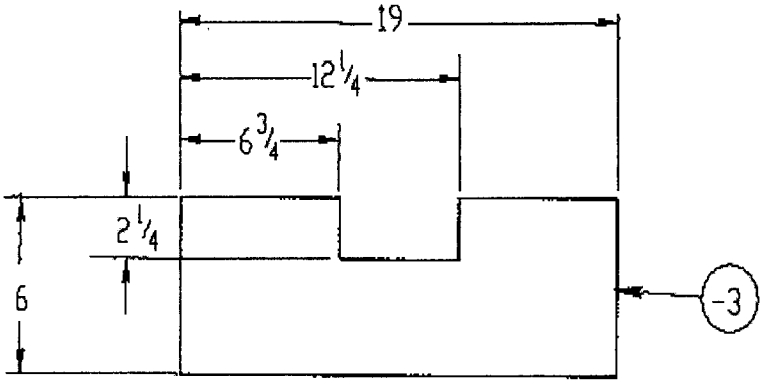

SPECIAL PACKAGING INSTRUCTION

CODE ID	SPI NO. (TPO)
98747	01-235-2927
	SHEET 1 OF 3

PART OR DRAWING NO.	NATIONAL STOCK NO.	CURRENT REV	ILL. E. NYE
68A412702-1001	1620-01-235-2927		CHK. S. MEIER
ITEM NOMENCLATURE		ORIGINAL DATE	ENGR. V. ELIZONDO
CYLINDER, MAIN LANDING		88060	AUTH. B. EVANS

PRESERVATION IAW MIL-P-116

LEVEL A METHOD I
LEVEL B METHOD I
LEVEL C METHOD I
QUP 001
ICQ 000
CLEANING C-1
DRYING D-1
PRESERVATIVE MIL-G-81322

MARKING IAW MIL-STD-129

SPECIAL MARKINGS:

A) SPI NO. 01-235-2927 MARK THE SPI NUMBER ON ONE SIDE OF THE CONTAINER AND ON ALL REMOVABLE DUNNAGE.

B) CAUTION: LIFT BY BASE ONLY

C) TO OPEN REMOVE BOTTOM LAG BOLTS

PACKING AS SPECIFIED BELOW AND BILL OF MATERIALS

LEVEL	SPEC	STYLE	TYPE	CL	VRTY	GR
A	MIL-B-26195(MOD)	A	II	1		
B	MIL-B-26195(MOD)	A	I	1		
C	MIL-B-26195(MOD)	A	I	1		

	LEVEL A	LEVEL B	LEVEL C
GROSS CU FT	9.688	9.688	9.688
GROSS WT LBS	120	120	120
DESIGN FRAGILITY G	110	110	110

	LENGTH	WIDTH	DEPTH
CNTR I.D.	29	25	15
CNTR O.D.	31	27	20
ITEM DIM	24 3/4	21	9

ITEM WT LBS 64

REVISIONS			
LTR	DESCRIPTION	DATE	APRVD

CLOSURE IN ACCORDANCE WITH MIL-B-26195

P/N	QTY REQD	NOMENCLATURE OR DESCRIPTION	SIZE (INCHES UNLESS SPECIFIED)	MATERIAL SPECIFICATION
-18	16	CORNER STRAPS	.028 X 3/4 X 12	QQ-S-781 CLASS 1, TYPE II, FIN A
-17	12	WASHERS	1/4 DIA	FF-W-92 TYPE A, GRADE I, CLASS A
-16	12	LAG BOLTS	1/4 X 2 1/2	FF-B-561 TYPE I, STYLE 1, GR B
-15	1	STRAPPING	.035 X 1 1/4 X 29	QQ-S-781 CLASS 1, TYPE I, HVY DUTY, FIN A
-14	1	STRAPPING	.035 X 1 1/4 X 15	QQ-S-781 CLASS 1, TYPE I, HVY DUTY, FIN A
-13	A/R	NYLON TAPE	AS REQUIRED X 3/4	PPP-T-97 TYPE III
-12	1	WRAP	AS REQUIRED	MIL-B-121 TYPE I, GRADE A, CLASS 2
-11	3	CHAFFING STRIPS	AS REQUIRED X 3 X 1/4	PPP-P-115 TYPE I OR EQUAL
-10	9	NUTS	3/8 DIA	FF-N-836 TYPE II, STYLE 4 (HEX)
-9	9	WASHERS	3/8 DIA	FF-W-92 TYPE A, GRADE I, CLASS A
-8	5	TORQUE WASHERS	TO FIT 3/8 BOLT	MS-98398 SEE NOTE 1
-7	4	BOLTS	3/8 X 6	FF-B-584 TYPE I, CLASS 1, STYLE A
-6	5	BOLTS	3/8 X 5	FF-B-584 TYPE I, CLASS 1, STYLE A
-5	1	BASE	29 X 25 X 1/2	NN-P-530 GROUP B
-4	1	SADDLE	2 X 4(NOM) X 25	MIL-STD-731 CLASS 2
-3	1	SADDLE	2 X 4(NOM) X 13 1/2	MIL-STD-731 CLASS 2
-2	2	HEADERS	2 X 2(NOM) X 29	MIL-STD-731 CLASS 2
-1	2	SKIDS	4 X 4(NOM) X 27	MIL-STD-731 CLASS 2

SPI NO 01-235-2927

DD FORM MARCH 87 2169 MOD

COMPUTER GENERATED

SPECIAL PACKAGING INSTRUCTION	CODE ID 98747	SPI NO. (TPO) 01-235-2927
ITEM NOMENCLATURE CYLINDER, MAIN LANDING		SHEET 2 OF 3

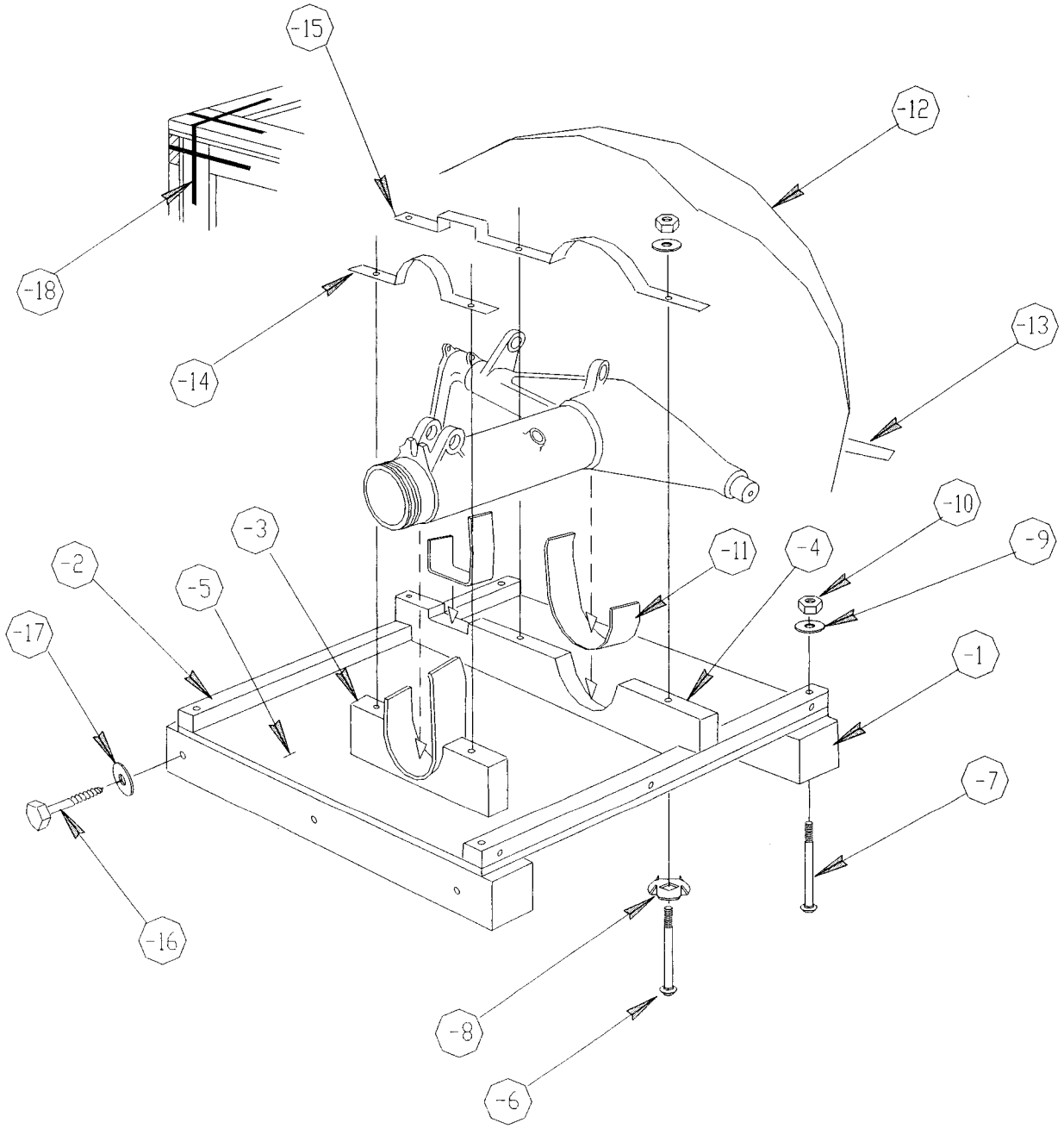

DD FORM MARCH 87 2169c MOD

COMPUTER GENERATED

SPECIAL PACKAGING INSTRUCTION	CODE ID 98747	SPI NO. (TPO) 01-235-2927
ITEM NOMENCLATURE CYLINDER, MAIN LANDING		SHEET 3 OF 3

NOTES:

1. SOURCE OF SUPPLY FOR TORQUE WASHERS, CATALOG NO. MS-98398: CARR FASTENER CO.
31 AMES ST
CAMBRIDGE MASS. 02142

2. UNLESS OTHERWISE SPECIFIED, DIMENSIONS WILL BE IN INCHES. TOLERANCES: ± 1/16

3. PRESERVE CRITICAL AREAS WITH MIL-G-81322 OR EQUAL. WRAP WITH -12 USING -13 AS REQUIRED TO SECURE WRAP.

4. CHAFFING STRIP, -11, SHALL BE USED AT ALL POINTS WHERE ITEM CONTACTS WOOD BLOCKING AND METAL STRAPPING. CHAFFING STRIPS SHALL BE HELD IN PLACE WITH STAPLES, FF-N-105, TYPE III, STYLE 3. SIZE OF STAPLES SHALL BE: 1/2" CROWN, 14 GAGE, 1/2" LENGTH.

5. USE -18, CORNER STRAPPING ON LEVEL A PACK ONLY.

6. JOISTS WILL BE PROVIDED IN SUPERSTRUCTURE IN ACCORDANCE WITH MIL-B-26195.

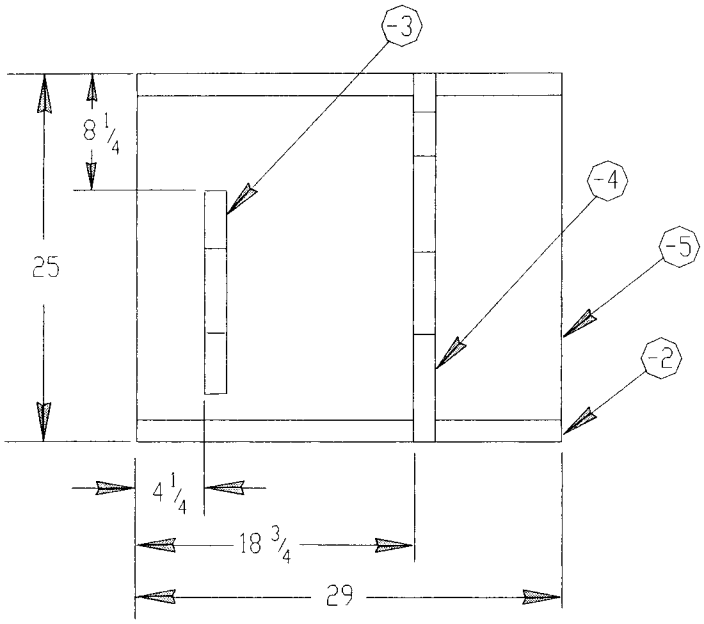

DETAIL, SHOWING POSITIONING OF BLOCKING ON BASE OF CONTAINER

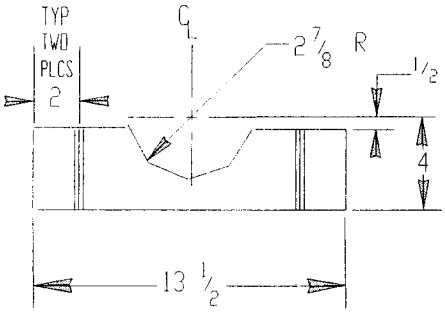

DETAIL OF SADDLE, -3

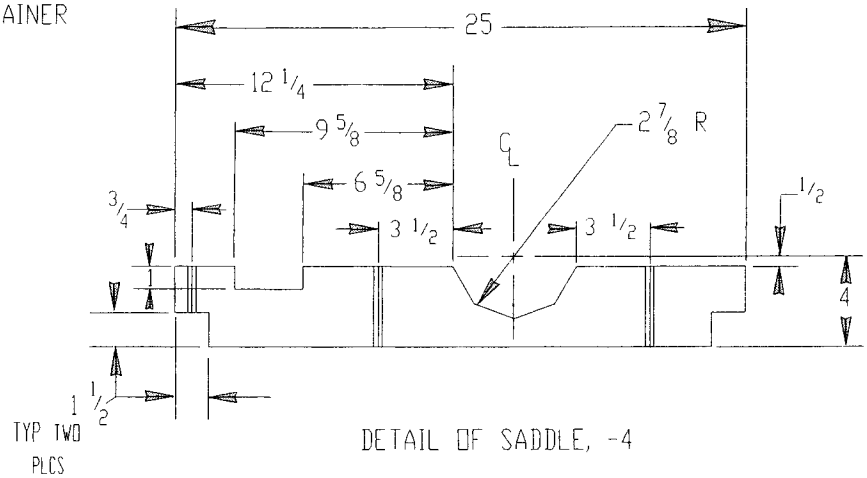

DETAIL OF SADDLE, -4

SPECIAL PACKAGING INSTRUCTION

CODE ID	SPI NO. (TPO)
98747	F01-232-9310
	SHEET 1 OF 4

PART OR DRAWING NO.	NATIONAL STOCK NO.	CURRENT REV	
68A452704-1003	1620-01-232-9310	A	ILL. C. CHARBONEAU
ITEM NOMENCLATURE		ORIGINAL DATE	CHK. T. ZIMMERMAN
PISTON ASSEMBLY, NOSE LANDING GEAR F-15		89139	ENGR. M. STEPHENS AUTH. P. FRANCIS

MILITARY PRESERVATION IAW MIL-STD-2073

SERVICEABLE METHOD: 20
UNSERVICEABLE METHOD: 20

QUP 001
ICQ 000

CLEANING & DRYING: IAW MIL-STD-2073

PRESERVATIVE: MIL-C-16173, GRADE 2

MARKING IAW MIL-STD-129

SPECIAL MARKINGS:

A) SPI NO. F01-232-9310
*MARK THE SPI NUMBER ON ONE SIDE OF THE CONTAINER AND ALL REMOVABLE DUNNAGE.

CLOSURE

LEVEL A: IAW ASTM-D6256
LEVEL B: IAW ASTM-D6256

SEE NOTES PAGE 2.

PACKING AS SPECIFIED BELOW AND BILL OF MATERIALS

LEVEL	SPEC	STYLE	TYPE	CL	VRTY	GR	TR
A	ASTM-D6256	A	1	2			B
B	ASTM-D6256	A	1	1			A

	LEVEL A	LEVEL B
GROSS CU FT	8.726	8.726
GROSS WT LBS	118	118
DESIGN FRAGILITY G	110	110

	LENGTH	WIDTH	DEPTH
CNTR I.D.	54 1/2	15 1/2	11
CNTR O.D.			
LEVEL A:	56 1/2	17 1/2	15 1/4
LEVEL B:	56 1/2	17 1/2	15 1/4
ITEM DIM	49	10 1/2	9
ITEM WT.	52 LBS.		

REVISIONS

LTR	DESCRIPTION	DATE
A	ADD WOOD STATEMENT & UPDATE SPECS	03133

P/N	QTY REQD	NOMENCLATURE DESCRIPTION	SIZE (INCHES UNLESS SPECIFIED)	MATERIAL SPECIFICATION
-15	10	NUTS	3/8	FF-N-836 TYPE II, STYLE 4
-14	18	WASHERS	1/4	FF-W-92 TYPE A, GRADE I, CLASS A
-13	10	WASHERS	3/8	FF-W-92 TYPE A, GRADE I, CLASS A
-12	4	TORQUE WASHERS	TO FIT 3/8 BOLT	NSN: 5310-00-936-9532
-11	18	LAG BOLTS	2 1/2 X 1/4	ASME/ANSI B18.2.1, B18.18.1
-10	4	BOLTS	6 1/2 X 3/8	ASME/ANSI B18.5, B18.9, B18.18.
-9	6	BOLTS	6 X 3/8	ASME/ANSI B18.5, B18.9, B18.18.1
-8	1	FIBERBOARD PAD	12 3/8 X 10 X 3/16	ASTM-D4727 VR DW, GRADE 200
-7	1	SUPPORT	12 3/8 X 10 X 1/2	A-A-55057 TYPE A
-6	1	BASE	54 1/2 X 15 1/2 X 3/4	A-A-55057 TYPE A
-5	1	BRACE	2 X 4 (NOM) X 12 3/8	ASTM-D6199 GROUP 1, CLASS 2
-4	1	SADDLE	2 X 4 1/2 (ACT) X 15 3/8	ASTM-D6199 GROUP 1, CLASS 2
-3	1	SADDLE	2 X 4 1/2 (ACT) X 15 3/8	ASTM-D6199 GROUP 1, CLASS 2
-2	2	HEADERS	2 X 2 (NOM) X 54 1/2	ASTM-D6199 GROUP 1, CLASS 2
-1	3	SKIDS	3 X 4 (NOM) X 17 1/2	ASTM-D6199 GROUP 1, CLASS 2

SPI NO. F01-232-9310

DD FORM MARCH 87 2169 MOD

COMPUTER GENERATED

SPECIAL PACKAGING INSTRUCTION	CODE ID 98747	SPI NO. (TPO) F01-232-9310
ITEM NOMENCLATURE PISTON ASSEMBLY, NOSE LANDING GEAR F-15		SHEET 2 OF 4

EUROPEAN UNION (EU) REQUIREMENTS NOTICES

NOTICE 1: LUMBER AND PACKAGING/CONTAINER STATEMENT – "ALL WOODEN LUMBER CONTAINERS PRODUCED ENTIRELY OR IN PART OF NON-MANUFACTURED SOFTWOOD SPECIES SHALL BE CONSTRUCTED FROM HEAT TREATED (HT) MATERIAL (HT TO 56 DEGREES CENTIGRADE OR 133 DEGREES FAHRENHEIT FOR 30 MINUTES). CERTIFICATION IS REQUIRED BY AN ACCREDITED AGENCY RECOGNIZED BY THE AMERICAN LUMBER STANDARDS COMMITTEE (ALSC). CONSTRUCTION AND CERTIFICATION SHALL BE IN ACCORDANCE WITH NON-MANUFACTURED WOOD PACKING POLICY AND NON-MANUFACTURED WOOD PACKING ENFORCEMENT REGULATIONS, BOTH DATED MAY 30, 2001." THESE DOCUMENTS CAN BE FOUND AT WWW.APHIS.USDA.GOV.

NOTICE 2: WOODEN PALLET STATEMENT – "ALL WOODEN PALLETS PRODUCED ENTIRELY OR IN PART OF NON-MANUFACTURED SOFTWOOD SPECIES SHALL BE CONSTRUCTED FROM HEAT TREATED (HT) MATERIAL (HT TO 56 DEGREES CENTIGRADE OR 133 DEGREES FAHRENHEIT FOR 30 MINUTES). CERTIFICATION IS REQUIRED BY AN ACCREDITED AGENCY RECOGNIZED BY THE AMERICAN LUMBER STANDARDS COMMITTEE (ALSC). CONSTRUCTION AND CERTIFICATION SHALL BE IN ACCORDANCE WITH NON-MANUFACTURED WOOD PACKING POLICY AND NON-MANUFACTURED WOOD PACKING ENFORCEMENT REGULATIONS, BOTH DATED MAY 30, 2001." THESE DOCUMENTS CAN BE FOUND AT WWW.APHIS.USDA.GOV.

NOTICE 3: HARDWOOD SPECIES STATEMENT – "ALL WOODEN PALLETS PRODUCED ENTIRELY OF NON-MANUFACTURED HARDWOOD SPECIES SHALL BE IDENTIFIED BY A PERMANENT MARKING OF "NC" (NON-CONIFEROUS), 1.25 INCHES OR GREATER IN HEIGHT, ACCOMPANIED BY THE CAGE CODE OF THE CONTRACTED MANUFACTURER AND THE MONTH AND YEAR OF THE CONTRACT. ON PALLETS, THE MARKING SHALL BE APPLIED TO THE STRINGER OR BLOCK ON OPPOSITE SIDES AND ENDS OF THE PALLET AND BE CONTRASTING AND CLEARLY VISIBLE."

NOTES

1. PRESERVE CRITICAL AREAS WITH MIL-C-16173, GRADE 2 AND WRAP WITH REF -17. SECURE WRAP WITH REF -19 AS REQUIRED.
2. CHAFFING STRIP, REF -16, OR CUSHIONING, REF -18, SHALL BE USED AT ALL POINTS WHERE ITEM WOULD CONTACT WOOD BLOCKING AND METAL STRAPPING. SECURE CHAFFING STRIP TO SADDLES USING STAPLES CONFORMING TO FF-N-105, TYPE III, STYLE 3, 1/2 INCH CROWN, 14 GAGE, 1/2 INCH LENGTH OR EQUAL.
3. POSITION REF -8 ON TOP OF REF -7 AND REF -5 ON TOP OF REF -8. ATTACH ALL THREE TO REF -6 AND END SKID USING 10d NAILS CONFORMING TO FF-N-105, TYPE II, STYLE 4A OR EQUAL.
4. APPLY CORNER STRAPS, REF -21, TO LEVEL A PACK ONLY, USING 3d NAILS CONFORMING TO FF-N-105, TYPE II, STYLE 7.

P/N	QTY REQD	NOMENCLATURE DESCRIPTION	SIZE (INCHES UNLESS SPECIFIED)	MATERIAL SPECIFICATION
-21	16	CORNER STRAPS	.028 X 3/4 X 12	ASTM-D3953 TYPE 2, FINISH A
-20	2	STRAPPING	.035 X 1 1/4 X 12	ASTM-D3953 TYPE 1, REG DUTY, FIN A
-19	A/R	TAPE	A/R X 1/2	ASTM-D5330 TYPE IV
-18	1	CUSHION WRAP	24 X 10 X 1/8	PPP-C-1797 TYPE I
-17	1	WRAP	36 X 13 1/2	MIL-PRF-121 TYPE I, GRADE A, CLASS 2
-16	2	CHAFFING STRIP	15 X 3 X 1/4	PPP-P-115 TYPE I OR EQUAL

SPECIAL PACKAGING INSTRUCTION	CODE ID 98747	SPI NO. (TPO) F01-232-9310
ITEM NOMENCLATURE PISTON ASSEMBLY, NOSE LANDING GEAR F-15		SHEET 3 OF 4

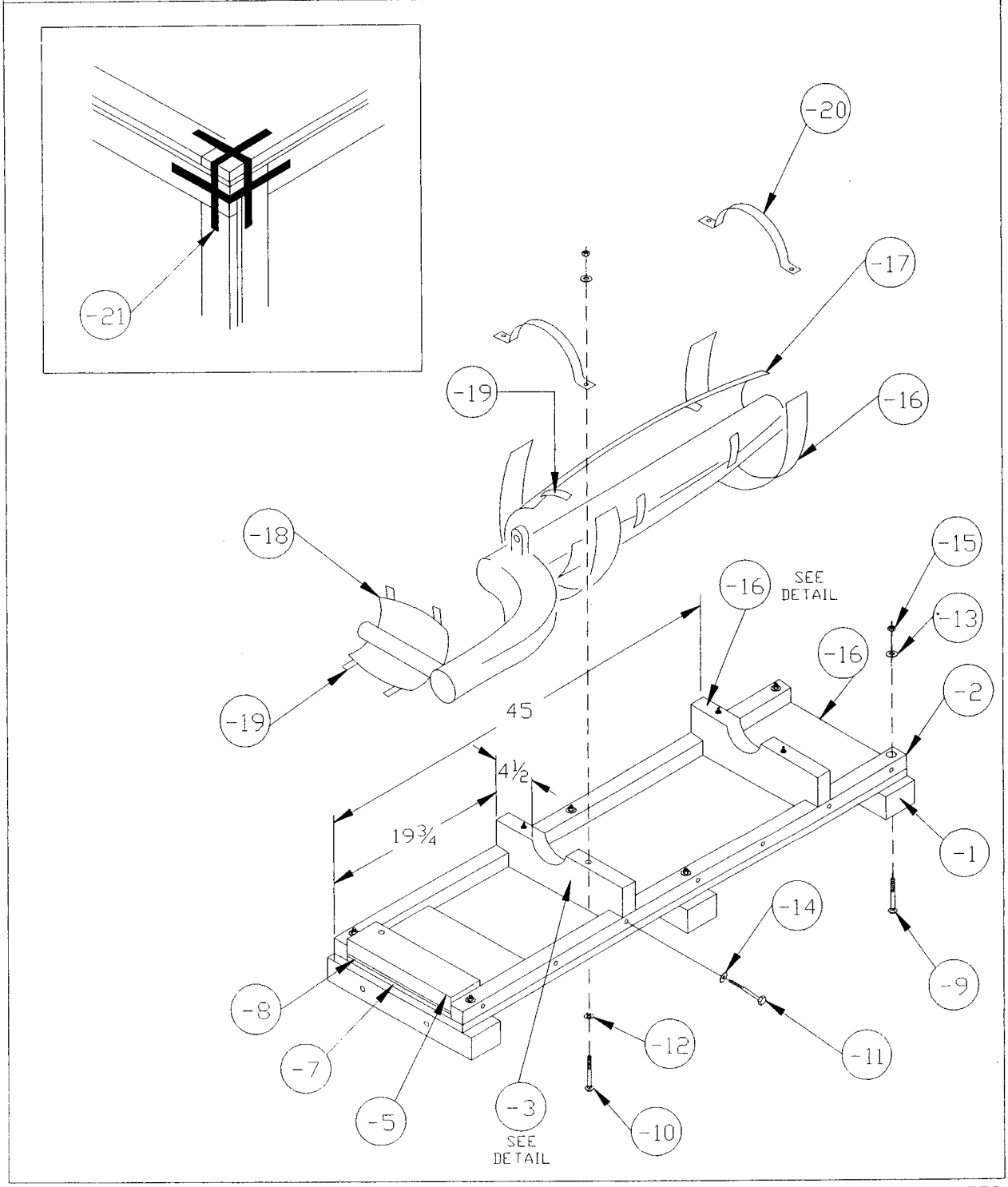

DD FORM MARCH 87 2169 MOD

COMPUTER GENERATED

SPECIAL PACKAGING INSTRUCTION	CODE ID 98747	SPI NO. (TPO) F01-232-9310
ITEM NOMENCLATURE PISTON ASSEMBLY, NOSE LANDING GEAR F-15		SHEET 4 OF 4

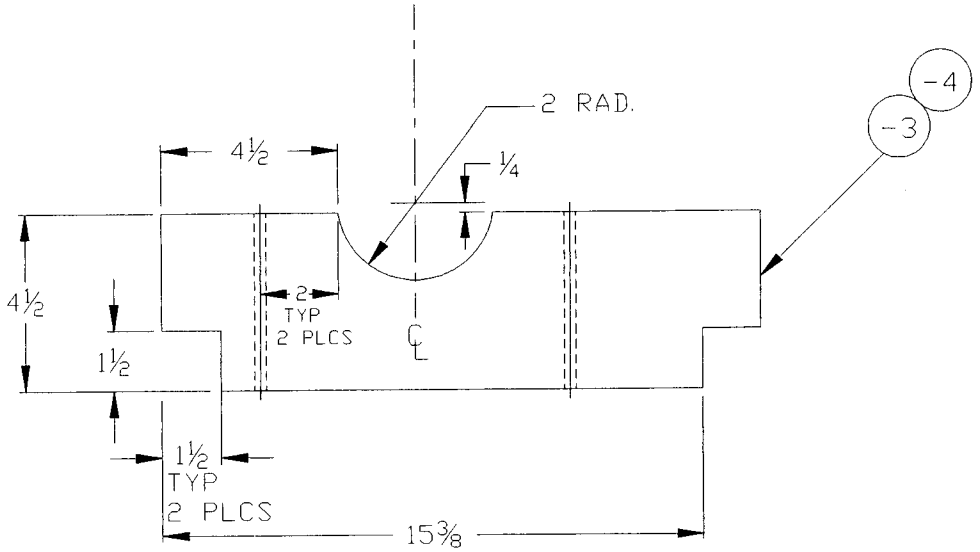

DD FORM MARCH 87 2169 MOD

COMPUTER GENERATED

SPECIAL PACKAGING INSTRUCTION

CODE ID 98747

SPI NO. (TPD) 01-236-3518

SHEET 1 OF 3

PART OR DRAWING NO.	NATIONAL STOCK NO.	CURRENT REV
68A412702-1002	1620-01-236-3518	

ITEM NOMENCLATURE: CYLINDER, MAIN LANDING

ORIGINAL DATE 88067

ILL. E. NYE

CHK. S. MEIER

ENGR. V. ELIZONDO

AUTH. B. EVANS

PRESERVATION IAW MIL-P-116

LEVEL A METHOD I
LEVEL B METHOD I
LEVEL C METHOD I
QUP 001
ICQ 000
CLEANING C-1
DRYING D-1
PRESERVATIVE MIL-G-81322

MARKING IAW MIL-STD-129

SPECIAL MARKINGS:

A) SPI NO. 01-236-3518 MARK THE SPI NUMBER ON ONE SIDE OF THE CONTAINER AND ON ALL REMOVABLE DUNNAGE.

B) CAUTION: LIFT BY BASE ONLY

C) TO OPEN REMOVE BOTTOM LAG BOLTS

PACKING AS SPECIFIED BELOW AND BILL OF MATERIALS

LEVEL	SPEC	STYLE	TYPE	CL	VRTY	GR
A	MIL-B-26195(MOD)	A	II	1		
B	MIL-B-26195(MOD)	A	I	1		
C	MIL-B-26195(MOD)	A	I	1		

	LEVEL A	LEVEL B	LEVEL C
GROSS CU FT	9.688	9.688	9.688
GROSS WT LBS	120	120	120
DESIGN FRAGILITY G	110	110	110

	LENGTH	WIDTH	DEPTH
CNTR I.D.	29	25	15
CNTR O.D.	31	27	20
ITEM DIM	24 3/4	21	9
ITEM WT LBS	64		

REVISIONS

LTR	DESCRIPTION	DATE	APRVD

CLOSURE IN ACCORDANCE WITH MIL-B-26195

P/N	QTY REQD	NOMENCLATURE OR DESCRIPTION	SIZE (INCHES UNLESS SPECIFIED)	MATERIAL SPECIFICATION	
-18	16	CORNER STRAPS	.028 X 3/4 X 12	QQ-S-781	CLASS 1, TYPE II, FIN A
-17	12	WASHERS	1/4 DIA	FF-W-92	TYPE A, GRADE 1, CLASS A
-16	12	LAG BOLTS	1/4 X 2 1/2	FF-B-561	TYPE 1, STYLE 1, GR B
-15	1	STRAPPING	.035 X 1 1/4 X 29	QQ-S-781	CLASS 1, TYPE 1, HVY DUTY, FIN A
-14	1	STRAPPING	.035 X 1 1/4 X 15	QQ-S-761	CLASS 1, TYPE 1, HVY DUTY, FIN A
-13	A/R	NYLON TAPE	AS REQUIRED X 3/4	PPP-T-97	TYPE III
-12	1	WRAP	AS REQUIRED	MIL-B-121	TYPE I, GRADE A, CLASS 2
-11	3	CHAFFING STRIPS	AS REQUIRED X 3 X 1/4	PPP-P-115	TYPE I OR EQUAL
-10	9	NUTS	3/8 DIA	FF-N-836	TYPE II, STYLE 4 (HEX)
-9	9	WASHERS	3/8 DIA	FF-W-92	TYPE A, GRADE 1, CLASS A
-8	5	TORQUE WASHERS	TO FIT 3/8 BOLT	MS-98398	SEE NOTE 1
-7	4	BOLTS	3/8 X 6	FF-B-584	TYPE 1, CLASS 1, STYLE A
-6	5	BOLTS	3/8 X 5	FF-B-584	TYPE 1, CLASS 1, STYLE A
-5	1	BASE	29 X 25 X 1/2	NN-P-530	GROUP B
-4	1	SADDLE	2 X 4(NOM) X 25	MIL-STD-731	CLASS 2
-3	1	SADDLE	2 X 4(NOM) X 13 1/2	MIL-STD-731	CLASS 2
-2	2	HEADERS	2 X 2(NOM) X 29	MIL-STD-731	CLASS 2
-1	2	SKIDS	4 X 4(NOM) X 27	MIL-STD-731	CLASS 2

SPI NO. 01-235-2927

DD FORM MARCH 87 2169 MOD

COMPUTER GENERATED

SPECIAL PACKAGING INSTRUCTION	CODE ID 98747	SPI NO. (TPD) 01-236-3518
ITEM NOMENCLATURE CYLINDER, MAIN LANDING		SHEET 2 OF 2

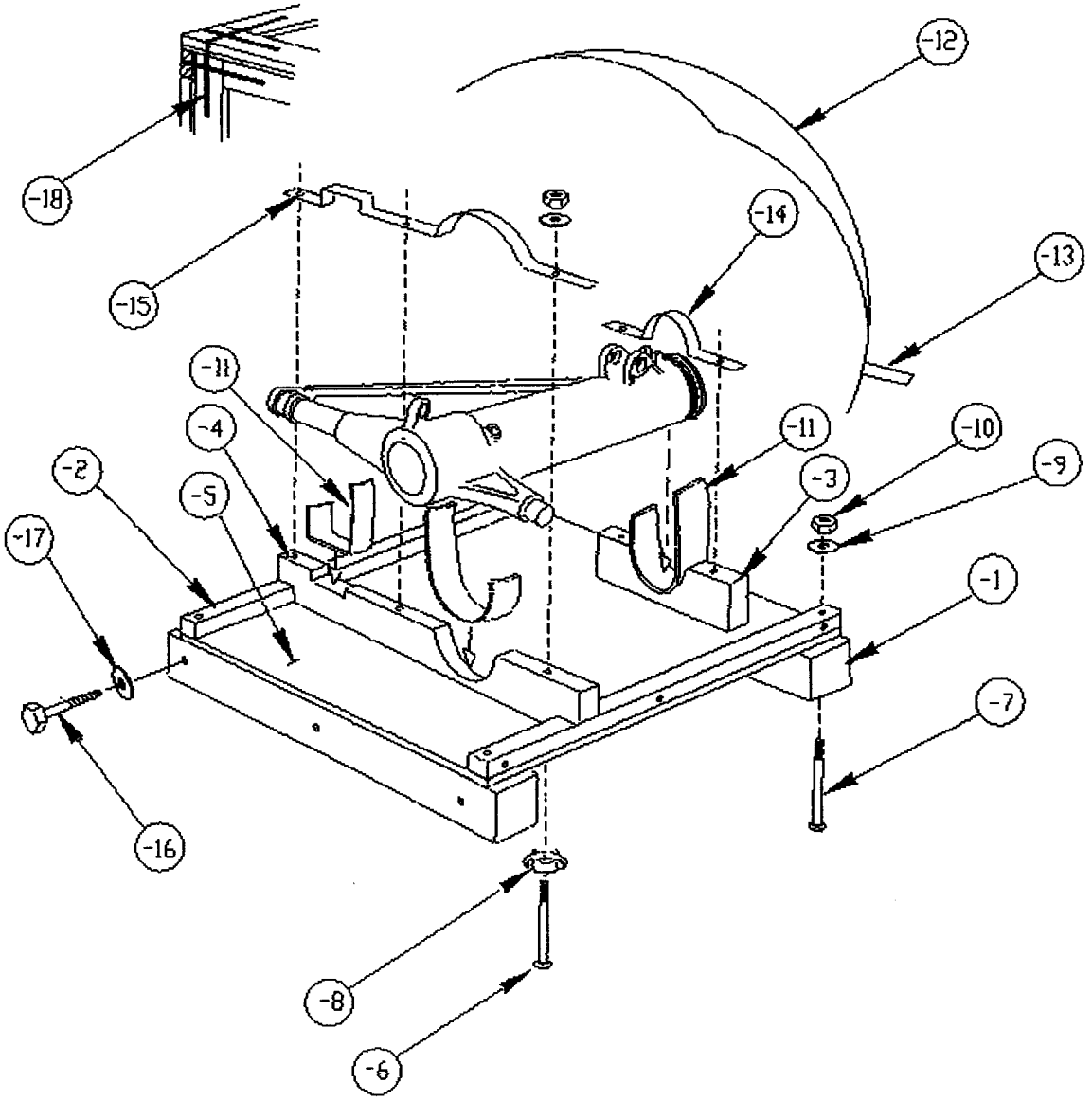

D 2169c MOD

COMPUTER GENERATED

SPECIAL PACKAGING INSTRUCTION	CODE 98747	SPI NO. (TPI) 01-236-3518
ITEM NOMENCLATURE CYLINDER, MAIN LANDING		SHEET 3 OF 3

NOTES:

1. SOURCE OF SUPPLY FOR TORQUE WASHERS, CATALOG NO. MS-98398: CARR FASTENER CO.
   31 AMES ST
   CAMBRIDGE MASS. 02142

2. UNLESS OTHERWISE SPECIFIED, DIMENSIONS WILL BE IN INCHES. TOLERANCES: ± 1/16

3. PRESERVE CRITICAL AREAS WITH MIL-G-81322 OR EQUAL. WRAP WITH -12 USING -13 AS REQUIRED TO SECURE WRAP.

4. CHAFFING STRIP, -11, SHALL BE USED AT ALL POINTS WHERE ITEM CONTACTS WOOD BLOCKING AND METAL STRAPPING. CHAFFING STRIPS SHALL BE HELD IN PLACE WITH STAPLES, FF-N-105, TYPE III, STYLE 3. SIZE OF STAPLES SHALL BE: 1/2" CROWN, 14 GAGE, 1/2" LENGTH.

5. USE -18, CORNER STRAPPING ON LEVEL A PACK ONLY.

6. JOISTS WILL BE PROVIDED IN SUPERSTRUCTURE IN ACCORDANCE WITH MIL-B-26195.

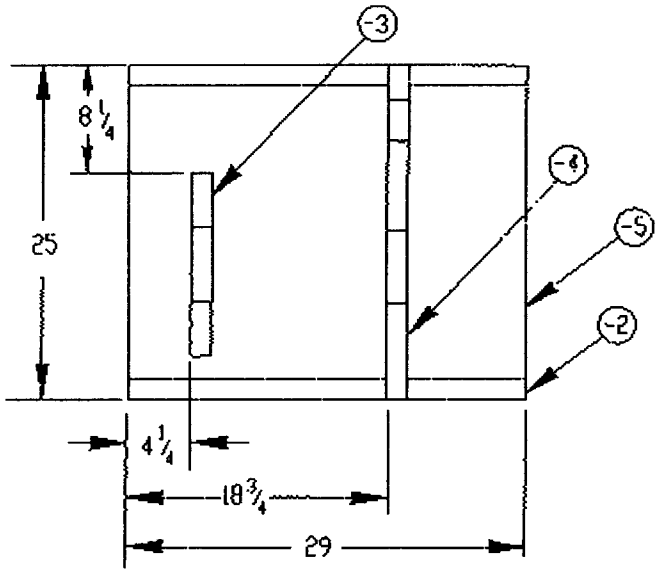

DETAIL, SHOWING POSITIONING OF BLOCKING ON BASE OF CONTAINER

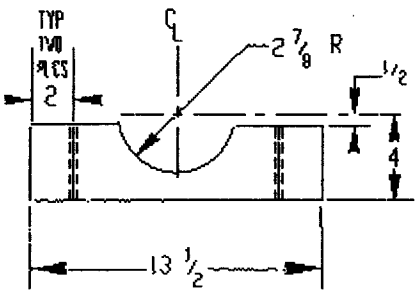

DETAIL OF SADDLE, -3

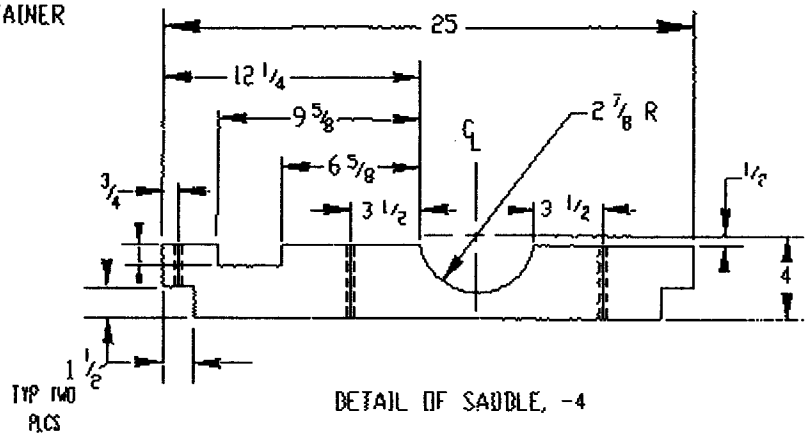

DETAIL OF SADDLE, -4

DD FORM 2169c MOD

COMPUTER GENERATED

SPECIAL PACKAGING INSTRUCTION

CODE ID	SPI NO. (TPO)
98747	F01-071-0534
	SHEET 1 OF 2

PART OR DRAWING NO.	NATIONAL STOCK NO.	CURRENT REV
2006644-103	1620-01-071-0534	
ITEM NOMENCLATURE		ORIGINAL DATE
PISTON, LANDING GEAR		99088

ILL. P. ELLISON
CHK. S. EDWARDS
ENGR. K.W. OLSON
AUTH. A. BRIMHALL

MILITARY PRESERVATION IAW: MIL-STD-2073

SERVICEABLE METHOD : 20
UNSERVICEABLE METHOD : 20

QUP 001
ICQ 000
CLEANING & DRYING IAW: MIL-STD-2073

PRESERVATIVE MIL-PRF-16173,GRADE 2, CODE 02

MARKING IAW MIL-STD-129

SPECIAL MARKINGS:
A) SPI NO. F01-071-0534
*MARK THE SPI NUMBER ON THE ONE SIDE OF THE CONTAINER
MARK REUSABLE CONTAINER DO NOT DESTROY

CLOSURE

LEVEL A: IAW: PPP-B-621
LEVEL B: IAW: ASTM-D1974

CAUTION NOTICE

1 THIS PISTON HAS A HISTORY OF CORROSION. INSURE THE PRESERVATIVE IS APPLIED AS INSTRUCTED IN NOTE 1.

2 GREASE SERTS ARE TO BE REMOVED, PLACED IN A POLY BAG AND ATTACHED TO AN AREA THAT WILL NOT CAUSE CORROSION WITH THE USE OF A STRING OR SIMILAR METHOD.

PACKING AS SPECIFIED BELOW AND BILL OF MATERIALS

LEVEL	SPEC	STYLE	TYPE	CL	VRTY	GR
A	PPP-B-621	4				A
B	ASTM-D5118	RSC				W5C

	LEVEL A	LEVEL B
GROSS CU FT	1.87	1.27
GROSS WT LBS	30	23
DESIGN FRAGILITY G	100	100

	LENGTH	WIDTH	DEPTH
CNTR I.D.	24	12	6 1/2
CNTR O.D.			
LEVEL A:	28	14	8 1/2
LEVEL B:	24 3/8	12 3/8	7 1/4
ITEM DIM	19 1/4	9 3/4	4 1/2
ITEM WT LBS	20		

REVISIONS		
LTR	DESCRIPTION	DATE

NOTES

1 APPLY MIL-C-16173, GRADE 2 PRESERVATIVE ON ALL BARE METAL SURFACES, INCLUDING INSIDE THE HOLLOW TUBE OF THE PISTON LANDING GEAR. INSURE ALL SURFACES ARE COMPLETELY COVERED. WRAP PRESERVED EXPOSED SURFACES WITH -3 WRAP AND SECURE IN PLACE WITH A-A-883 TAPE -9 OR EQUAL.

2 WRAP AND CUSHION PISTON WITH MICROFOAM -7 AND FILL ALL VOIDS SO ITEM IS PACKED VERY SNUG.

P/N	QTY REQD	NOMENCLATURE DESCRIPTION	SIZE (INCHES UNLESS SPECIFIED)	MATERIAL SPECIFICATION REVISIONS
-10	A/R	TAPE	A/R X 3	ASTM-D5486 OR EQUAL
-9	A/R	TAPE	A/R X 1	A-A-883 TYPE I OR TYPE II
-8	1	PLATTEN	12 X 6 1/2 X 1/8	ASTM-D4727 CF, DOM, SW, GR 200
-7	A/R	CUSHIONING	A/R	PPP-C-1797 TYPE 1
-6	2	SIDE PADS	19 1/2 X 4 1/2 X 1	A-A-59135 CLASS I, GRADE A
-5	2	TOP & BOTTOM PADS	19 1/2 X 12 X 1	A-A-59135 CLASS I, GRADE A
-4	2	END PADS	12 X 6 1/2 X 2	A-A-59135 CLASS I, GRADE A
-3	A/R	WRAP	A/R	MIL-PRF-121 TY I, GR. A, H.D.
-2	1	STRING	A/R	ANY SUTIABLE VARITY
-1	1	POLY BAG	4 X 4 X A/R	L-P-378 TYPE I, CL I, GR. A , FIN. I

SPI NO. F01-071-0534

DD FORM MARCH 87 2169 MOD

COMPUTER GENERATED

SPECIAL PACKAGING INSTRUCTION	CODE ID 98747	SPI NO. (TPO) F01-071-0534
ITEM NOMENCLATURE PISTON, LANDING GEAR		SHEET 2 OF 2

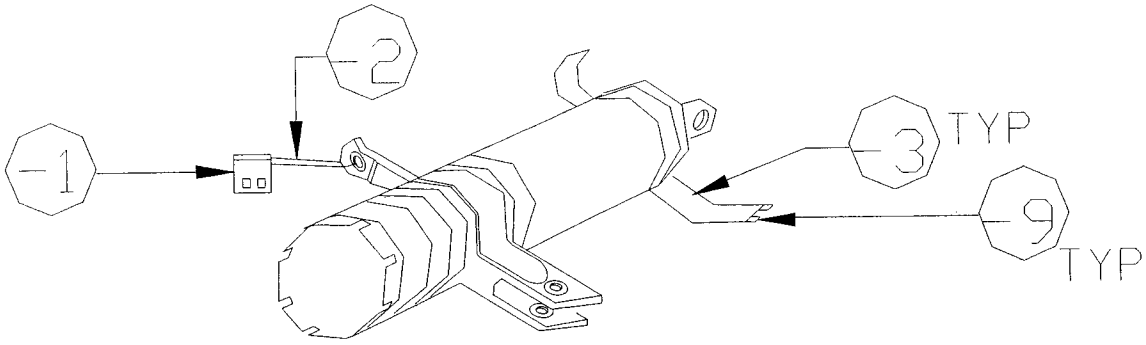

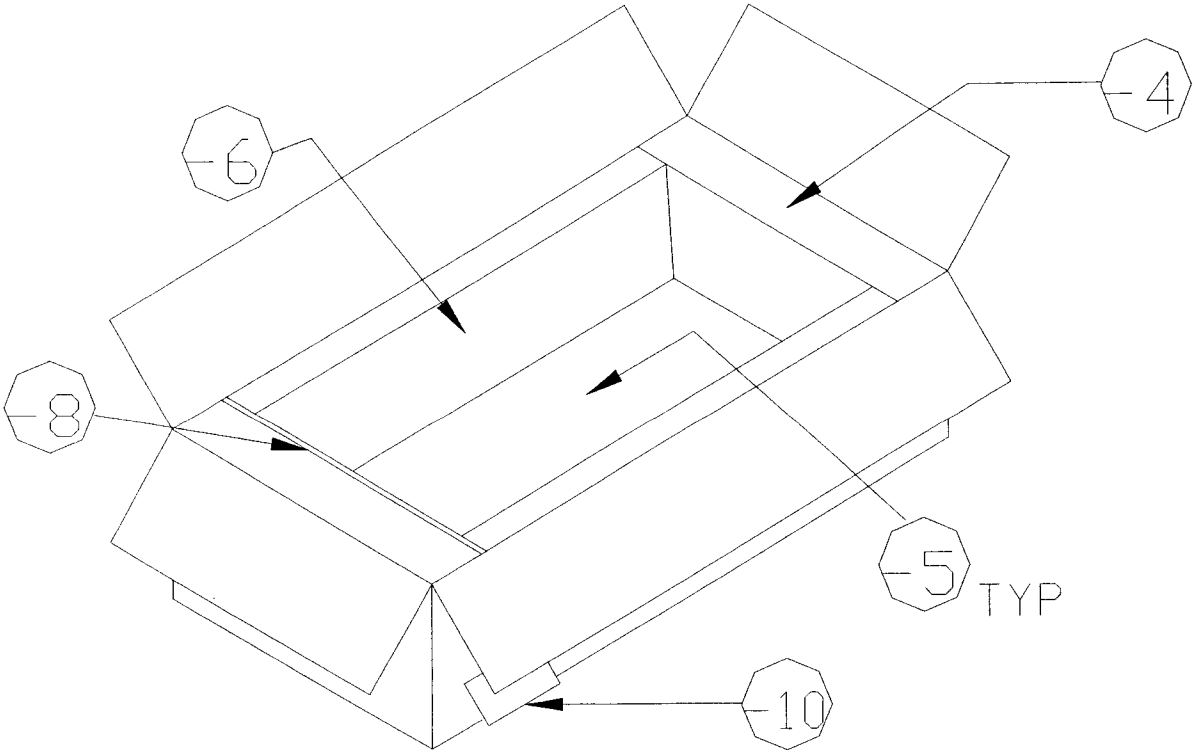

SHEET 1 OF 1

PART OR DRAWING NO.	NATIONAL STOCK NO.	CURRENT REV
P/N 2007106-103	1620-01-253-1350	

ILL. D. HEISE

CHK. S. MEIER

ENGR. V. ELIZONDO

AUTH. B. EVANS

ITEM NOMENCLATURE

PISTON ASBLY, OUTER

ORIGINAL DATE 89047

PRESERVATION IAW MIL-P-116

LEVEL A METHOD	I
LEVEL B METHOD	I
LEVEL C METHOD	I (REPARABLES)
DUP	001
ICQ	000
CLEANING	C-1
DRYING	D-1
PRESERVATIVE	MIL-G-81322

MARKING IAW MIL-STD-129

SPECIAL MARKINGS:

A) SPI NO. 01-253-1350

MARK THE SPI NUMBER ON ONE SIDE OF THE CONTAINER AND ON ALL REMOVABLE DUNNAGE.

CLOSURE LEVEL A: IAW PPP-B-621

LEVEL B: METHOD V AND REINFORCED IAW PARA 30.5.2 AND 30.5.2.1 OF PPP-B-636.

LEVEL C: METHOD II AND REINFORCED WHEN REQUIRED IAW PARA 30.5.1 OF PPP-B-636.

NOTES:

1. PRESERVE CRITICAL AREAS WITH MIL-G-81322 OR EQUAL. WRAP IN REF-1 AND SECURE WITH REF-2.
2. USE REF-3 OR EQUAL AS REQUIRED TO COMPLETELY ENCLOSE ITEM AND CREATE A SNUG FIT IN CONTAINER.

PACKING AS SPECIFIED BELOW AND BILL OF MATERIALS

LEVEL	SPEC	STYLE	TYPE	CL	VRTY	GR
A	PPP-B-621 (MOD)	4		2		A
B	PPP-B-636	RSC				V3c
C	PPP-B-636	RSC	CF	DOM	SW	175

	LEVEL A	LEVEL B	LEVEL C
GROSS CU FT	1.129	.928	.928
GROSS WT LBS	29	19	19
DESIGN FRAGILITY G	110	110	110

	LENGTH	WIDTH	DEPTH
CNTNR I.D.	28	8	6
CNTNR O.D.			
LEVEL A	31	9 1/2	6 5/8
LEVEL B & C	28 3/8	8 3/8	6 3/4
ITEM DIM	23	7 1/4	4 1/2
ITEM WT LBS	17		

REVISIONS

LTR	DESCRIPTION	DATE	APRVD

P/N	QTY REQD	NOMENCLATURE OR DESCRIPTION	SIZE (INCHES UNLESS SPECIFIED)	MATERIAL SPECIFICATION	
-4	2	TOP & BTM (LEVEL A ONLY)	29 1/2 X 9 1/2 X 5/16	NN-P-530	GROUP B
-3	A/R	CUSHIONING	AS REQUIRED	PPP-C-1797	TYPE I
-2	A/R	TAPE	AS REQUIRED X 1/2	PPP-T-97	TYPE I
-1	1	WRAP	30 X 26	MIL-B-121	TYPE I, GRADE A, CLASS 2

DD FORM MARCH 87 2169 MOD

COMPUTER GENERATED

01-253-1350

SPECIAL PACKAGING INSTRUCTION

CODE ID	SPI NO. (TPO)
98747	F 01-252-3344
	SHEET 1 OF 2

PART OR DRAWING NO.	NATIONAL STOCK NO.	CURRENT REV
2007101-103	1620-01-252-3344	B

ITEM NOMENCLATURE: PISTON ASSY, INNER

ORIGINAL DATE: 89060

ILL. P. ELLISON
CHK. S. EDWARDS
ENGR. K.W. OLSON
AUTH. A. BRIMHALL

MILITARY PRESERVATION IAW: MIL-STD-2073

SERVICEABLE METHOD : 20
UNSERVICEABLE METHOD : 20

QUP 001
ICQ 000
CLEANING & DRYING IAW: MIL-STD-2073

PRESERVATIVE MIL-C-11796 OR MIL-C-16173
GRADE 2 CODE 02

MARKING IAW MIL-STD-129

SPECIAL MARKINGS:
A) SPI NO. F01-252-3344

** MARK THE SPI NUMBER ON ONE SIDE OF THE CONTAINER

MARK REUSABLE CONTAINER

DO NOT DESTROY

PACKING AS SPECIFIED BELOW AND BILL OF MATERIALS

LEVEL	SPEC	STYLE	TYPE	CL	VRTY	GR
A	PPP-B-621	4		2		A
B	ASTM D5118	RSC				W5c

	LEVEL A	LEVEL B
GROSS CU FT	.991	.660
GROSS WT LBS	27	15
DESIGN FRAGILITY G	110	110

	LENGTH	WIDTH	DEPTH
CNTR I.D.	28	7	5
CNTR O.D.	7	5	28
LEVEL A:	31	8 1/2	6 1/2
LEVEL B:	7 3/8	5 3/8	28 3/4
ITEM DIM	23	5 1/2	4
ITEM WT LBS	14		

REVISIONS		
LTR	DESCRIPTION	DATE
A	CHANGED PRESERVATIVE	93070
B	ADD DRAWING & CHANGE NOTE AND UPDATE	99109

CLOSURE

LEVEL A: IAW PPP-B-621
LEVEL B: IAW ASTM-D1974

CAUTION NOTICE

1. THIS PISTON HAS A HISTORY OF CORROSION. INSURE THE PERSERVATIVE IS APPLIED AS INSTRUCTED IN NOTE 1.

NOTE

1. APPLY MIL-C-16173, GRADE 2 PRESERVATIVE ON ALL BARE METAL SURFACES, INCLUDING INSIDE THE HOLLOW TUBE OF THE PISTON ASSEMBLY. INSURE ALL SURFACES ARE COMPLETELY COVERED. WRAP PRESERVED EXPOSED SURFACES WITH -5 AND SECURE IN PLACE WITH A-A-883 TAPE OR EQUAL.

2. PLACE END BLOCKS IN CONTAINER PRIOR TO THE ITEM BEING WRAPPED IN -3 CUSHIONING.
3. USE -3 OR EQUAL AS REQUIRED TO ENSURE A SNUG FIT IN CONTAINER.
4. PISTON ASSEMBLIES MUST BE PACKED TO THIS SPI REVISION.

P/N	QTY REQD	NOMENCLATURE DESCRIPTION	SIZE (INCHES UNLESS SPECIFIED)	MATERIAL SPECIFICATION REVISIONS
-5	A\R	TAPE	3 X A\R	ASTM-D5486
-4	2	END BLOCKS	7 X 5 X 2	A-A-59135 CLASS 1, GRADE A
-3	A\R	CUSHIONING	AS REQUIRED	PPP-C-1797 TYPE I
-2	A\R	TAPE	AS REQUIRED X 1\2	A-A-883 TYPE I OR II
-1	1	WRAP	30 X 25	MIL-PRF-121 TYPE I, GRADE A, CLASS 2

SPI NO. F 01-252-3344

SPECIAL PACKAGING INSTRUCTION	CODE ID 98747	SPI NO. (TPO) F 01-252-3344
ITEM NOMENCLATURE PISTON ASSY, INNER		SHEET 2 OF 2

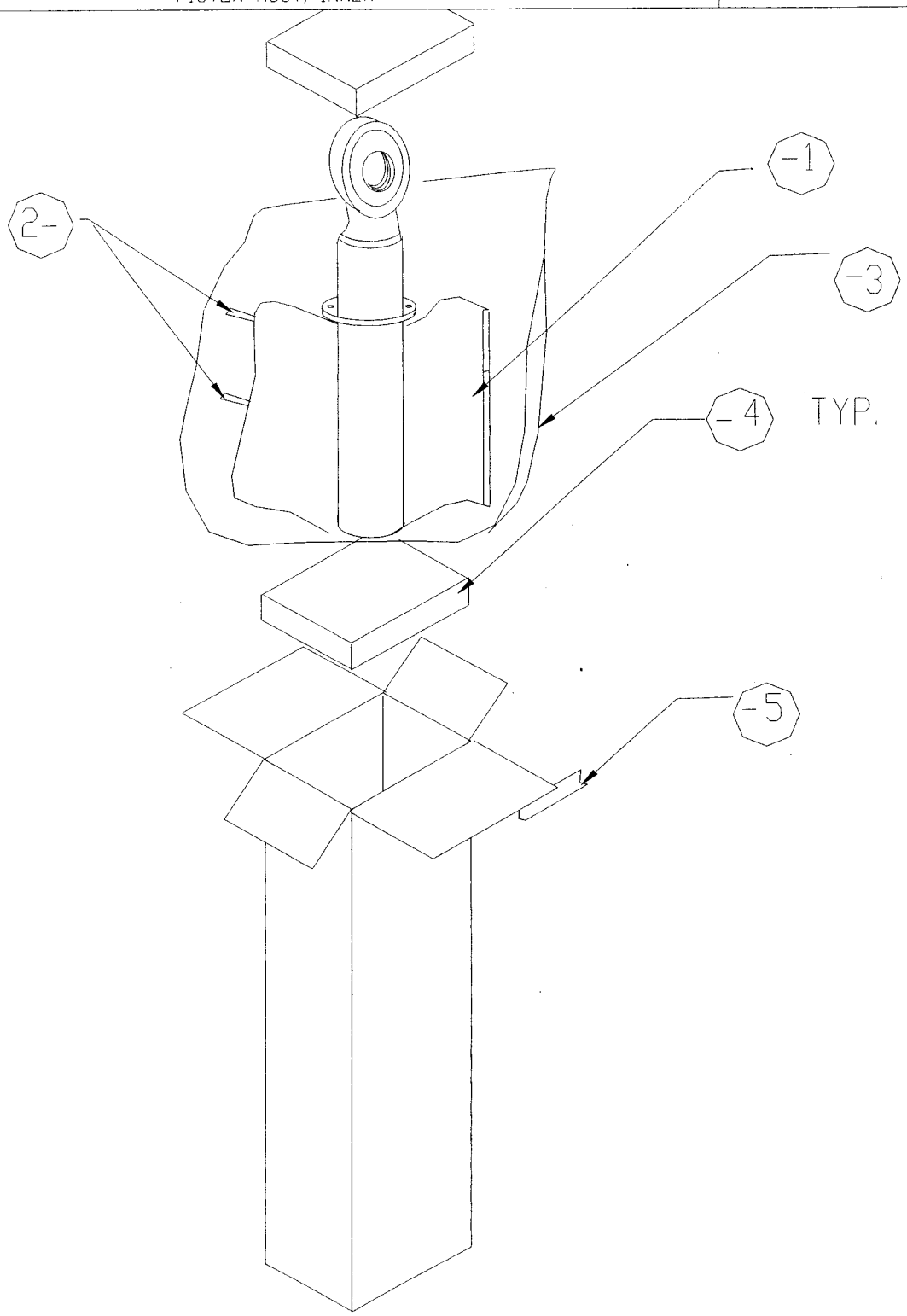

DD FORM MARCH 87 2169 MOD

COMPUTER GENERATED

SPECIAL PACKAGING INSTRUCTION

CODE ID	SPI NO. (TPO)
98747	01-200-7131
	SHEET 1 OF 1

PART OR DRAWING NO.	NATIONAL STOCK NO.	CURRENT REV
2006106-105	1620-01-200-7131	N/A

ITEM NOMENCLATURE: PISTON ASSEMBLY

ORIGINAL DATE: 87362

ILL. P. RUSSELL
CHK. P. BURNITT
ENGR. J. R. BENNETT
AUTH. B. EVANS

PRESERVATION IAW MIL-P-116

LEVEL A METHOD	IA-8
LEVEL B METHOD	IA-3
LEVEL C METHOD	III
QUP	001
ICQ	000
CLEANING	C-1
DRYING	D-1
PRESERVATIVE	MIL-G-81322

MARKING IAW MIL-STD-129

SPECIAL MARKINGS:
A) SPI NO. 01-200-7131
B) REUSABLE CONTAINER AND DUNNAGE
DO NOT DESTROY

MARK THE SPI NUMBER ON ONE SIDE OF THE CONTAINER AND ON ALL REMOVABLE DUNNAGE.

PACKING AS SPECIFIED BELOW AND BILL OF MATERIALS

LEVEL	SPEC	STYLE	TYPE	CL	VRTY	GR
A	PPP-B-621 (MOD)	4		2		
B	PPP-B-636	RSC				V3c
C	PPP-B-636	RSC	CF	DOM	SW	175

	LEVEL A	LEVEL B	LEVEL C
GROSS CU FT	.861	.694	.694
GROSS WT LBS	25.00	13.53	13.53
DESIGN FRAGILITY G	110	110	110

	LENGTH	WIDTH	DEPTH
CNTR I.D.	24	7 1/2	5 1/2
CNTR O.D.	SEE BELOW		
ITEM DIM	23 1/8	6 1/2	4 1/4
ITEM WT LBS	11.0		

REVISIONS			
LTR	DESCRIPTION	DATE	APRVD

CLOSURE

LEVEL A: PPP-B-621.
LEVEL B: METHOD V AND REINFORCED IAW PARA 30.5.2. AND 30.5.2.1 OF PPP-B-636.
LEVEL C: METHOD II AND REINFORCED WHEN REQUIRED IAW PARA 30.5.1 OF PPP-B-636.

CNTR O.D. LEVEL A: 27 X 9 X 6 1/8.
LEVELS B&C: 24 3/8 X 7 7/8 X 6 1/4
UNLESS OTHERWISE SPECIFIED, DIMENSIONS WILL BE IN INCHES. TOLERANCES: FRACTIONS: + OR - 1/16.

NOTES: 1. PRESERVE CRITICAL AREAS AS NECESSARY WITH MIL-G-81322.

2. WRAP PRESERVED AREAS WITH (REF -1). SECURE IN PLACE WITH TAPE (REF -4).

3. CUSHION WRAPPED ASSEMBLY WITH (REF -2). SECURE IN PLACE WITH TAPE (REF -4).

4. PACKAGE CUSHIONED ASSEMBLY METHOD IA-8 IN BARRIER BAG (REF -3) AND HEAT SEAL. (ELIMINATE THIS STEP FOR LEVEL C PACKAGING).

5. CUSHION BAGGED ASSEMBLY WITH (REF -2). PLACE CUSHIONED ASSEMBLY IN APPLICABLE SHIPPING CONTAINER. USE ADDITIONAL CUSHIONING (REF -2) TO PROTECT THE BAG AND ASSURE A TIGHT FIT.

6. TOP AND BOTTOM OF LEVEL A BOX SHALL BE MADE OF 25 1/2 X 9 X 5/16 PLYWOOD CONFORMING TO NN-P-530, GROUP B OR EQUAL.

P/N	QTY REQD	NOMENCLATURE OR DESCRIPTION	SIZE (INCHES UNLESS SPECIFIED)	MATERIAL SPECIFICATION
-4	A/R	TAPE	A/R	PPP-T-97, TYPE 1
-3	1	BAG	29W X 12L (ID)	MIL-B-117, TYPE I, CLASS E, STYLE 1
-2	A/R	CUSHIONING	A/R	PPP-C-1797, TYPE I
-1	1	WRAP	30 X 26	MIL-B-121, TYPE I, GRADE A, CLASS 2

SPI NO 01-200-7131

DD FORM 2169 MOD

COMPUTER GENERATED

SPECIAL PACKAGING INSTRUCTION

CODE ID	SPI NO. (TPO)
98747	F01-071-0534
	SHEET 1 OF 2

PART OR DRAWING NO.	NATIONAL STOCK NO.	CURRENT REV
2006644-103	1620-01-071-0534	

ITEM NOMENCLATURE: PISTON, LANDING GEAR

ORIGINAL DATE: 99088

ILL. P. ELLISON
CHK. S. EDWARDS
ENGR. K.W. OLSON
AUTH. A. BRIMHALL

MILITARY PRESERVATION IAW: MIL-STD-2073

SERVICEABLE METHOD : 20

UNSERVICEABLE METHOD : 20

QUP 001
ICQ 000
CLEANING & DRYING IAW: MIL-STD-2073

PRESERVATIVE MIL-PRF-16173,GRADE 2, CODE 02

MARKING IAW MIL-STD-129

SPECIAL MARKINGS:

A) SPI NO. F01-071-0534

*MARK THE SPI NUMBER ON THE ONE SIDE OF THE CONTAINER
MARK REUSABLE CONTAINER DO NOT DESTROY

CLOSURE

LEVEL A: IAW: PPP-B-621
LEVEL B: IAW: ASTM-D1974

CAUTION NOTICE

1 THIS PISTON HAS A HISTORY OF CORROSION. INSURE THE PRESERVATIVE IS APPLIED AS INSTRUCTED IN NOTE 1.

2 GREASE SERTS ARE TO BE REMOVED, PLACED IN A POLY BAG AND ATTACHED TO AN AREA THAT WILL NOT CAUSE CORROSION WITH THE USE OF A STRING OR SIMILAR METHOD.

PACKING AS SPECIFIED BELOW AND BILL OF MATERIALS

LEVEL	SPEC	STYLE	TYPE	CL	VRTY	GR
A	PPP-B-621	4				A
B	ASTM-D5118	RSC				W5C

	LEVEL A	LEVEL B
GROSS CU FT	1.87	1.27
GROSS WT LBS	30	23
DESIGN FRAGILITY G	100	100

	LENGTH	WIDTH	DEPTH
CNTR I.D.	24	12	6 1/2
CNTR O.D.			
LEVEL A:	28	14	8 1/2
LEVEL B:	24 3/8	12 3/8	7 1/4
ITEM DIM	19 1/4	9 3/4	4 1/2
ITEM WT LBS	20		

REVISIONS

LTR	DESCRIPTION	DATE

NOTES

1 APPLY MIL-C-16173, GRADE 2 PRESERVATIVE ON ALL BARE METAL SURFACES, INCLUDING INSIDE THE HOLLOW TUBE OF THE PISTON LANDING GEAR. INSURE ALL SURFACES ARE COMPLETELY COVERED. WRAP PRESERVED EXPOSED SURFACES WITH -3 WRAP AND SECURE IN PLACE WITH A-A-883 TAPE -9 OR EQUAL.

2 WRAP AND CUSHION PISTON WITH MICROFOAM -7 AND FILL ALL VOIDS SO ITEM IS PACKED VERY SNUG.

P/N	QTY REQD	NOMENCLATURE DESCRIPTION	SIZE (INCHES UNLESS SPECIFIED)	MATERIAL SPECIFICATION REVISIONS
-10	A/R	TAPE	A/R X 3	ASTM-D5486 OR EQUAL
-9	A/R	TAPE	A/R X 1	A-A-883 TYPE I OR TYPE II
-8	1	PLATTEN	12 X 6 1/2 X 1/8	ASTM-D4727 CF, DOM, SW, GR 200
-7	A/R	CUSHIONING	A/R	PPP-C-1797 TYPE 1
-6	2	SIDE PADS	19 1/2 X 4 1/2 X 1	A-A-59135 CLASS I, GRADE A
-5	2	TOP & BOTTOM PADS	19 1/2 X 12 X 1	A-A-59135 CLASS I, GRADE A
-4	2	END PADS	12 X 6 1/2 X 2	A-A-59135 CLASS I, GRADE A
-3	A/R	WRAP	A/R	MIL-PRF-121 TY I, GR. A, H.D.
-2	1	STRING	A/R	ANY SUTIABLE VARITY
-1	1	POLY BAG	4 X 4 X A/R	L-P-378 TYPE I, CL I, GR. A , FIN. I

SPI NO. F01-071-0534

DD FORM MARCH 87 2169 MOD

COMPUTER GENERATED

SPECIAL PACKAGING INSTRUCTION	CODE ID 98747	SPI NO. (TPO) F01-071-0534
ITEM NOMENCLATURE PISTON, LANDING GEAR		SHEET 2 OF 2

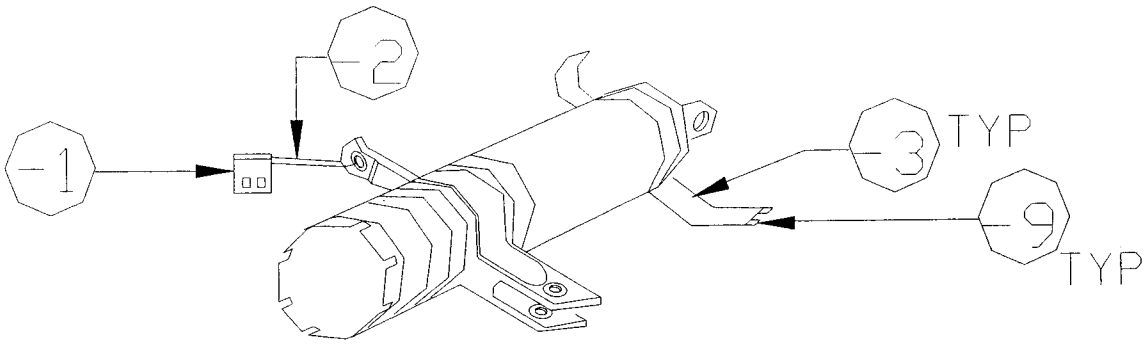

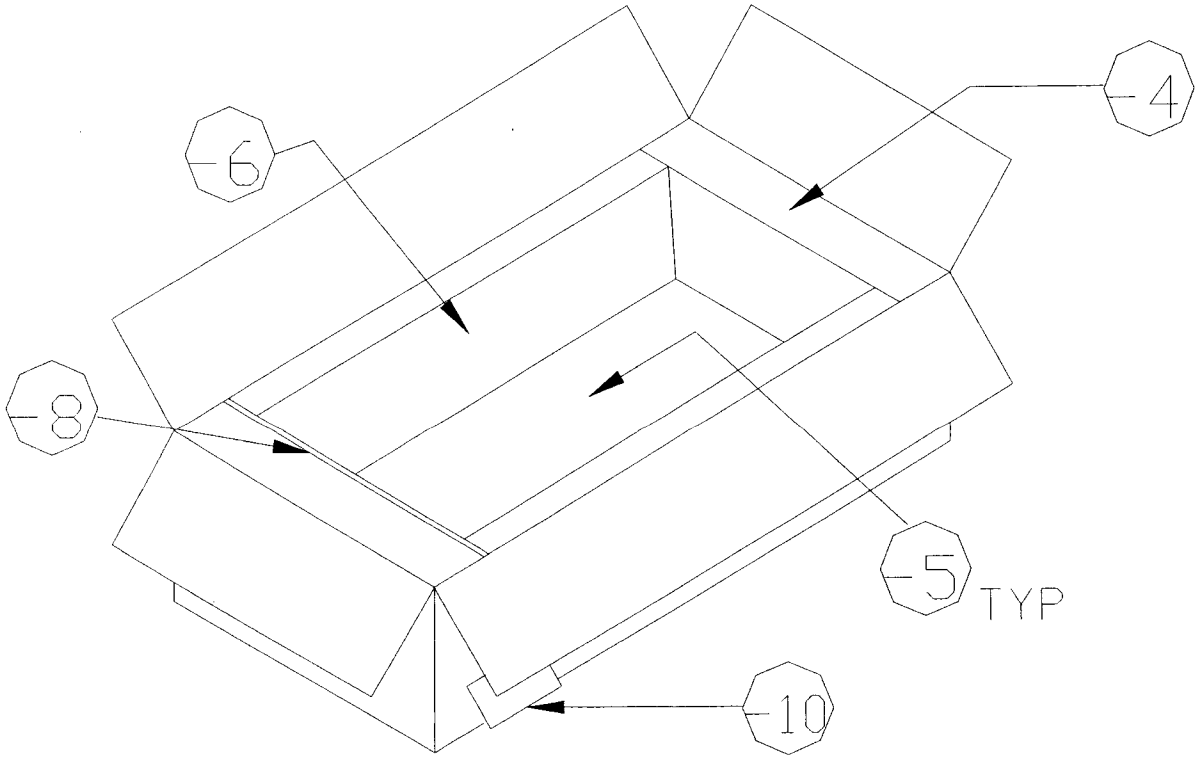

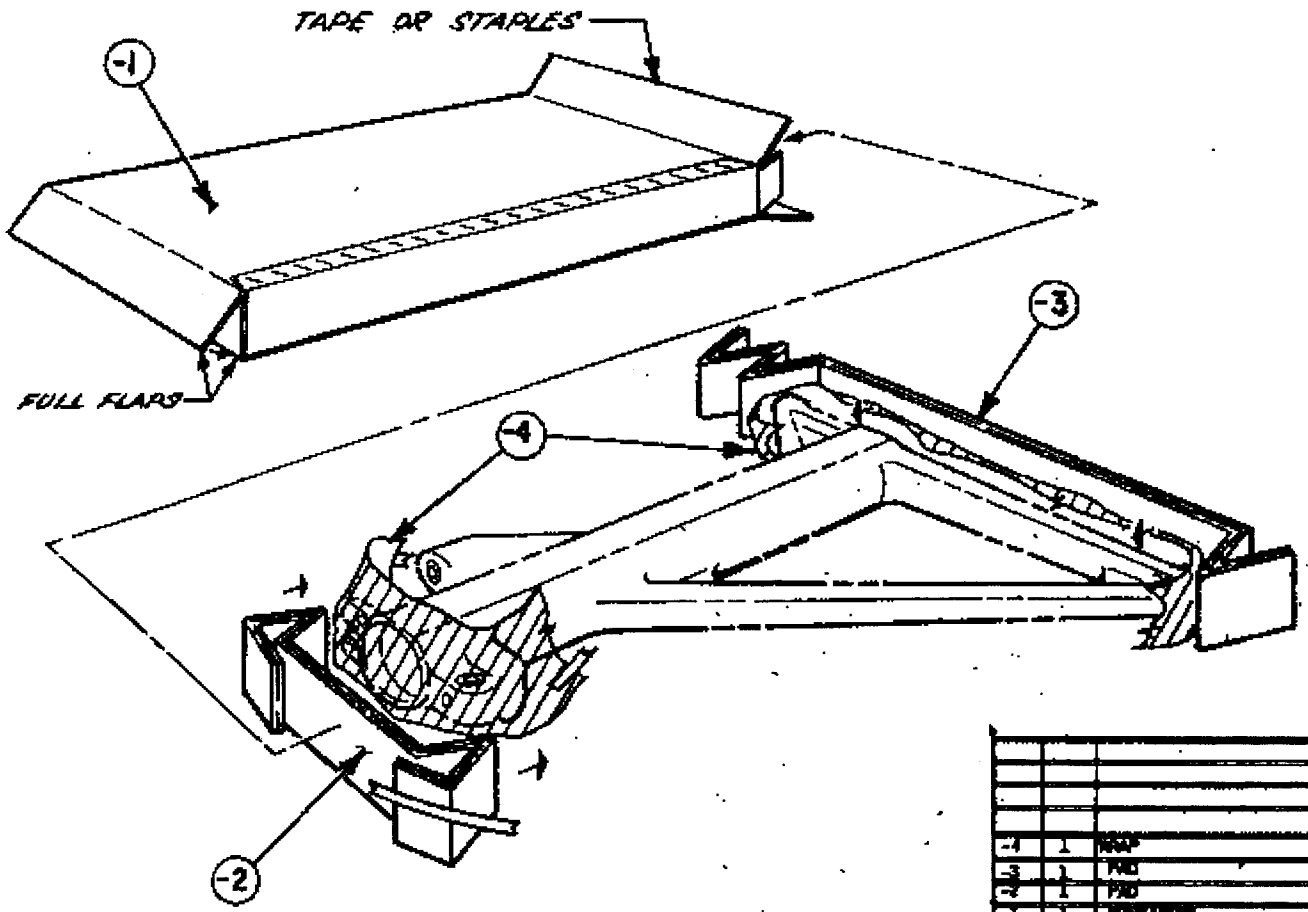

REVISIONS				
	LTR	DESCRIPTION	DATE	APPROVED
REV	G	SUPERSEDES DWG DATED 77077	79187	[illegible]
REV	H	CHGD CARTON STYLE AND NOTE	81035	[illegible]

PRESERVATION & PACKAGING
LEVEL A IN A/W MIL-P-116 METHOD I
LEVEL B IN A/W MIL-P-116 METHOD I
LEVEL C
CLEANING & DRYING IN A/W MIL-P-116
PRESERVATION COMPOUND SEE NOTE.
AMOUNT OF DESICCANT (units) N/A
CLOSURE OR STRAPPING IN A/W PPP-B-636 { METHOD IV, DOMESTIC / METHOD V, OVERSEAS
MARKING IN A/W MIL-STD-129
SPECIAL MARKING: APPLICABLE SEE INSTRUCTIONS / NOT APPLICABLE
INSTRUCTIONS:

MARK: "TPO 00-011-0192", ON ONE SIDE OF CONTAINER

MARK: "REUSABLE CONTAINER-DO NOT DESTROY" ON ONE SIDE

NOTE:

MIL-C-18175 GRADE 2 SHALL BE APPLIED TO AXLES, CYLINDERS AND BUSHINGS, AND MIL-G-23827 TO BEARINGS. TREATED PARTS SHALL BE COVERED WITH MIL-B-121 BARRIER AND SECURED WITH PPP-T-60 TAPE.

ALTERNATE: WRAP CRITICAL AREAS AND BEARING WITH MIL-P-3420 NO. 40 VPI, TYPE I, CLASS 2, STYLE A, OR EQUAL

REF	QTY	DESCRIPTION	SIZE	MATERIAL	SPECIFICATION
-4	1	WRAP	AS REQUIRED	BARRIER MATERIAL TYPE II GR A,	MIL-B-121
-3	1	PAD	SEE DETAIL	FIBERBOARD DW GR 200	PPP-F-320
-2	1	PAD	SEE DETAIL	FIBERBOARD DW GR 200	PPP-F-320
-1	1	CONTAINER	27 1/4 X 19 3/4 X 3 7/8	FIBERBOARD, V3c, SW, TYPE CF	PPP-B-636

EXTERIOR CONTAINER		LIST OF MATERIALS						GROSS	
LEVEL	SPECIFICATION	SIZE I.D.	STYLE	TYPE	CLASS	VARIETY	GRADE	WT	CU
A	PPP-B-636	27 1/4 X 19 3/4x3 7/8	FOL	CF		SW	V3c	30	1.5
B	PPP-B-636	27 1/4 X 19 3/4x3 7/8	FOL	CF		SW	V3c	30	1.5
C	PPP-B-636	27 1/4 X 19 3/4x3 7/8	FOL	CF		SW	V3c	30	1.5
AIR									

NET WT 25 | OUTSIDE DIMENSIONS 27 3/4 X 20 1/4 X 4 3/8

QUANTITY REQUIRED PER DASH NO.											

PARTS LIST

UNLESS OTHERWISE SPECIFIED

APPLICATION

U.S. AIR FORCE
OGDEN ALC HILL AFB UTAH

TITLE: CYLINDER F-5

SIZE C | DRAWING NO. TPO 00-011-0192

SCALE 1620 | SHEET 1 of 2

REVISIONS

LTR	DESCRIPTION	DATE	APPROVED

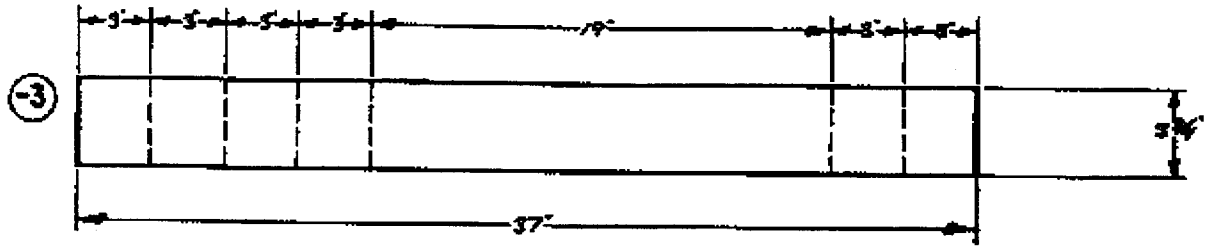

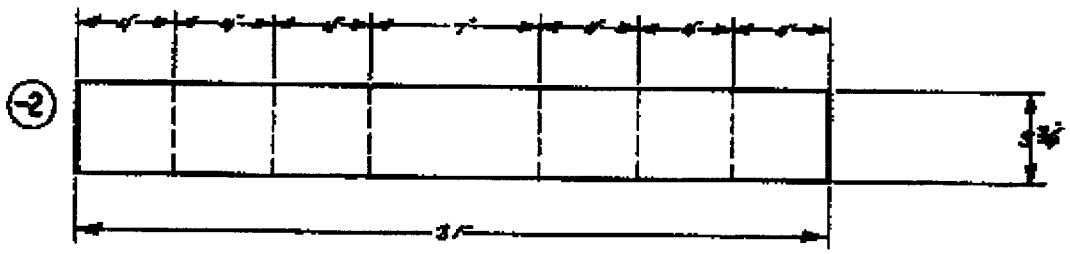

QUANTITY REQUIRED PER BASE NO.	SYM	NOMENCLATURE	CODE IDENT	IDENTIFYING NO.	MATERIAL / SPECIFICATION	UNIT WT	ZONE	PROJ

PARTS LIST

U.S. AIR FORCE

TITLE

CYLINDER F - 5

SIZE C

DWG NO. 00-011-0192

SCALE 1/2 SHEET 2 of 2

APPLICATION

SPECIAL PACKAGING INSTRUCTION

IDE ID	SPI NO. (TPO)
98747	00-007-1781

SHEET 1 OF 2

PART OR DRAWING NO.	NATIONAL STOCK NO.	CURRENT REV
14-40605-9	1620-00-007-1781	

ITEM NOMENCLATURE
PISTON, LANDING GEAR

ORIGINAL DATE 88202

ILL. D. HEISE
CHK. F. LANDERS
ENGR. S. MEIER
AUTH. B. EVANS

PRESERVATION IAW MIL-P-116

LEVEL A	METHOD	I
LEVEL B	METHOD	I
LEVEL C	METHOD	I (REPARABLES)
QUP		001
ICQ		000
CLEANING		C-1
DRYING		D-1
PRESERVATIVE		MIL-C-16173, GRADE 2

MARKING IAW MIL-STD-129

SPECIAL MARKINGS:

A) SPI NO. 00-007-1781

MARK THE SPI NUMBER ON ONE SIDE OF THE CONTAINER AND ON ALL REMOVABLE DUNNAGE

CLOSURE IAW PPP-B-621

PACKING AS SPECIFIED BELOW AND BILL OF MATERIALS

LEVEL	SPEC	STYLE	TYPE	CL	VRTY	GR
A	PPP-B-621	4		2		A
B	PPP-B-621 (MOD)	4		1		B
C	PPP-B-621 (MOD)	4		1		B

	LEVEL A	LEVEL B	LEVEL C
GROSS CU FT	2.370	2.116	2.116
GROSS WT LBS	64	57	57
DESIGN FRAGILITY G	100	100	100

	LENGTH	WIDTH	DEPTH
CNTNR I.D.	42	11 1/2	5 1/2
CNTNR O.D.			
LEVEL A	45	13	7
LEVEL B & C	45	13	6 1/4
ITEM DIM	40	10	5
ITEM WT LBS	36		

NOTES:

1. USE MIL-C-16173, GRADE 2, ON CRITICAL SURFACES AND WRAP WITH REF-5. TAPE TO SECURE USING A-A-883 TAPE OR EQUAL.
2. USE THE PLYWOOD TOP & BOTTOM (P/N -6) FOR LEVEL B AND C SHIPMENTS ONLY.

REVISIONS

LTR	DESCRIPTION	DATE	APRVD

UNLESS OTHERWISE SPECIFIED, DIMENSIONS WILL BE IN INCHES. TOLERANCES: FRACTIONS: + OR - 1/16

P/N	QTY REQD	NOMENCLATURE OR DESCRIPTION	SIZE (INCHES UNLESS SPECIFIED)	MATERIAL SPECIFICATION	
-6	2	T & B (LEV B & C ONLY)	43 1/2 X 13 X 3/8	NN-P-530	GROUP B
-5	A/R	WRAP	AS REQD	MIL-B-121	TYPE II, GRADE A, CLASS 2
-4	2	CUSHIONS	A/R X 3 X 1/2	PPP-P-115	TYPE I
-3	8	CLEATS	5 1/2 X 2 1/2 X 3/4	NN-P-530	GROUP B
-2	2	SADDLES	2 3/4 X 1 1/2 (ACT) X 11 1/2	MIL-STD-731	CLASS 2
-1	2	SADDLES	2 3/4 X 1 1/2 (ACT) X 11 1/2	MIL-STD-731	CLASS 2

SPI NO. 00-007-1781

SPECIAL PACKAGING INSTRUCTION	CODE ID 98747	SPI NO. (TPO) 00-007-1781
ITEM NOMENCLATURE PISTON, LANDING GEAR		SHEET 2 OF 2

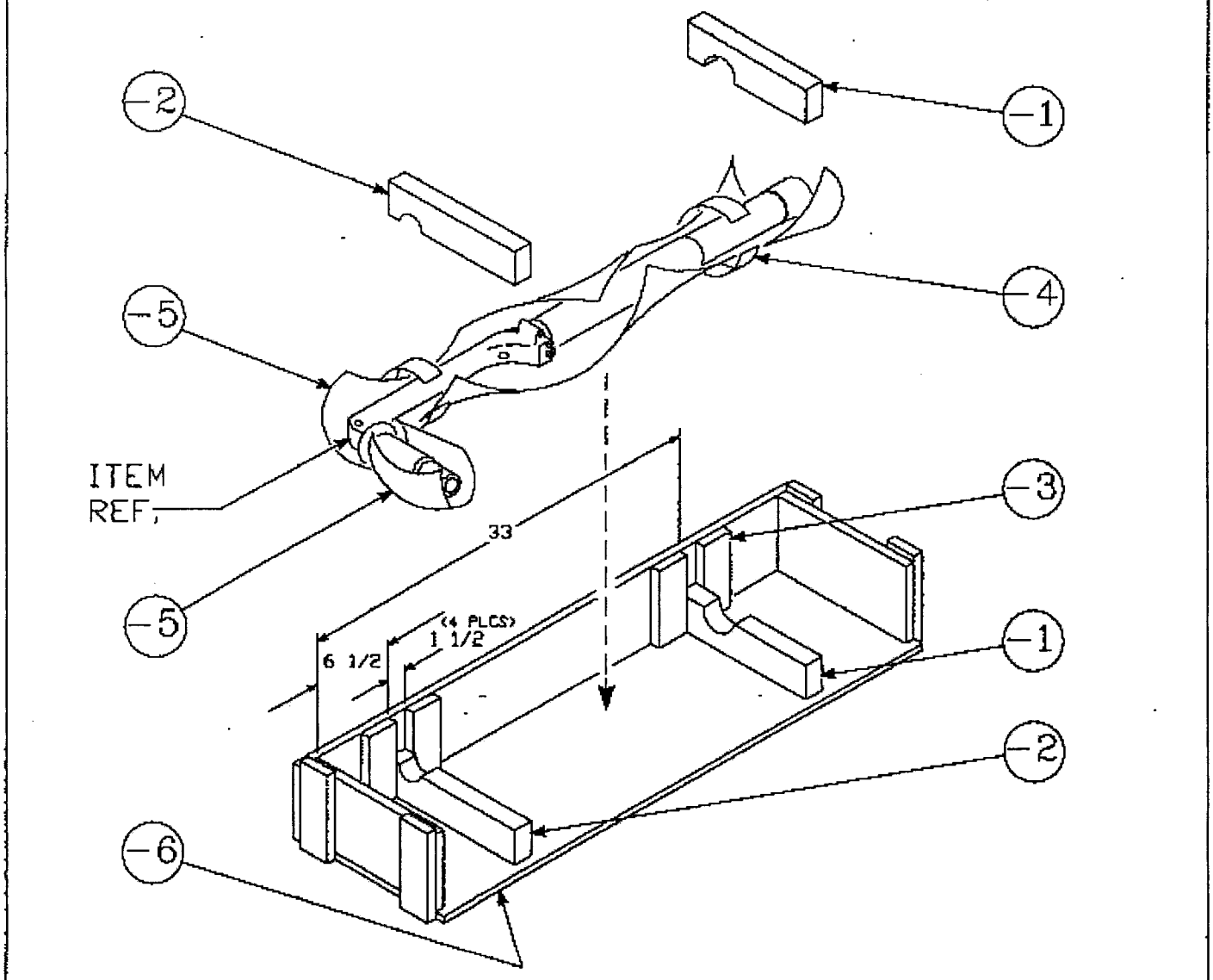

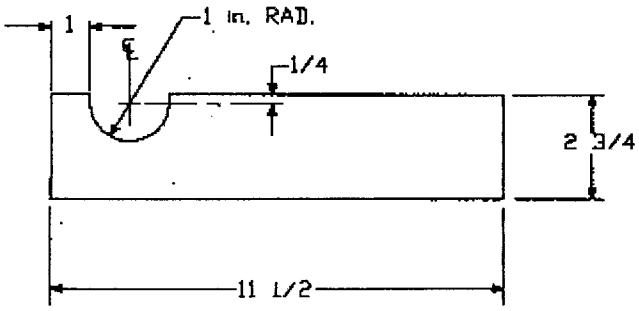

-2 DETAIL

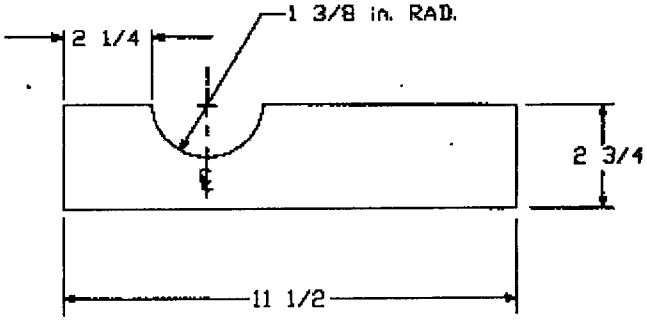

-1 DETAIL

SPECIAL PACKAGING INSTRUCTION

CODE ID	SPI NO. (TPO)
98747	F01-252-4042
	SHEET 1 OF 2

PART OR DRAWING NO.	NATIONAL STOCK NO.	CURRENT REV	
2007602-103	1620-01-252-4042	B	ILL. T. LUCERO CHK. T. ZIMMERMAN
ITEM NOMENCLATURE PISTON ASSEMBLY		ORIGINAL DATE 89167	ENGR. K.W. OLSON AUTH. A. BRIMHALL

MILITARY PRESERVATION IAW MIL-STD-2073

SERVICEABLE METHOD 20
UNSERVICEABLE METHOD 20

QUF 001

ICQ 000

CLEANING & DRYING IAW MIL-STD-2073

PRESERVATIVE MIL-PRF-16173, GR 2, CODE 02

MARKING IAW MIL-STD-129

SPECIAL MARKINGS:

A) SPI NO. F01-252-4042

MARK THE SPI NUMBER ON ONE SIDE OF THE CONTAINER AND ON ALL REMOVABLE DUNNAGE.
MARK REUSABLE CONTAINER DO NOT DESTROY

CLOSURE IAW PPP-B-621

CAUTION NOTICE

1. THIS PISTON HAS A HISTORY OF CORROSION. INSURE THE PRESERVATIVE IS APPLIED AS INSTRUCTED IN NOTE 1.

NOTES:

1. APPLY MIL-PRF-16173, GRADE 2 PRESERVATIVE ON ALL BARE METAL SURFACES, INCLUDING INSIDE HOLLOW TUBE OF THE PISTON ASSEMBLY. INSURE ALL SURFACES ARE COMPLETELY COVERED. WRAP PRESERVED EXPOSED SURFACES WITH -5 AND SECURE IN PLACE WITH A-A-883 TAPE OR EQUAL.

PACKING AS SPECIFIED BELOW AND BILL OF MATERIALS

LEVEL	SPEC	STYLE	TYPE	CL	VRTY	GR
A	PPP-B-621 (MOD)	4		2		A
B	PPP-B-621 (MOD)	4		1		B

	LEVEL A	LEVEL B
GROSS CU FT	2.474	2.474
GROSS WT LBS	54	54
DESIGN FRAGILITY G	100	100

	LENGTH	WIDTH	DEPTH
CNTR I.D.	35	11	8
CNTR O.D.	38	12 1/2	9
ITEM DIM	32	9	5 1/2
ITEM WT LBS	31		

REVISIONS		
LTR	DESCRIPTION	DATE
A	ADD NOTES & UPDATE	99129
B	UPDATE/ADD WOOD STATEMENT	01320

2. SOURCE OF SUPPLY FOR TORQUE WASHERS, CATALOG NO. MS-98398K2915:
TRW FASTENER DIV.
31 AMES ST.
CAMBRIDGE, MASS. 02142, OR LOCAL PURCHASE

3. PISTONS PACKED IN PREVIOUS ADDITIONS OF THIS SPI DO NOT REQUIRE REPACKING IF THE INTEGRITY OF THE SPI IS NOT COMPROMISED.

NOTICE 1: TRAFFIC MANAGEMENT OFFICES OR ANY ACTIVITY BUYING SOLID WOOD MATERIAL TO USE FOR BUILDING OR ASSEMBLING PACKAGING MUST COMPLY WITH THE FOLLOWING REQUIREMENT FOR PURCHASING THE WOOD: "ALL WOODEN PALLETS AND WOOD CONTAINERS PRODUCED OF NON-MANUFACTURED WOOD SHALL BE CONSTRUCTED FROM HEAT TREATED (HT TO 56 DEGREES CENTIGRADE FOR 30 MINUTES) MATERIAL AND CERTIFIED BY AN ACCREDITED AGENCY RECOGNIZED BY THE AMERICAN LUMBER STANDARDS COMMITTEE (ALSC) IN ACCORDANCE WITH NON-MANUFACTURED WOOD PACKING POLICY AND NON-MANUFACTURED WOOD PACKING ENFORCEMENT REGULATIONS BOTH DATED MAY 30, 2001." THESE DOCUMENTS CAN BE FOUND AT WWW.APHIS.USDA.GOV.

P/N	QTY REQD	NOMENCLATURE OR DESCRIPTION	SIZE (INCHES UNLESS SPECIFIED)	MATERIAL SPECIFICATION	
-12	A/R	TAPE	1 X A/R	A-A-883	TYPE I OR II
-11	6	NUTS	3/8	FF-N-836	TYPE II, STYLE 4
-10	6	WASHERS	3/8	FF-W-92	TYPE A, GRADE I, CLASS A
-9	6	TORQUE WASHERS	to fit 3/8 BOLT	5310-00-936-9532	(SEE NOTE 2)
-8	6	BOLTS	3/8 X 5	FF-B-584	TYPE I, CLASS 1, STYLE A
-7	3	STRAPPING	A/R X 1 1/4 X .035	ASTM-D3953	TYPE I, REG DUTY, FIN B
-6	3	CUSHIONING	A/R X 3 X 1/4	PPP-PRF-115	TYPE I (CARGO PACK)
-5	1	WRAP	20 X 12	MIL-PRF-121	TYPE I, GRADE A, CLASS 1
-4	1	WRAP	8 X 8	MIL-PRF-121	TYPE I, GRADE A, CLASS 1
-3	2	SADDLES	2 X 4 (NOM) X 8	ASTM-D6199	CLASS 2
-2	1	SADDLE	2 X 4 (NOM) X 7	ASTM-D6199	CLASS 2
-1	2	TOP & BOTTOM	36 1/2 X 12 1/2 X 1/2	A-A-55057	TYPE A

SPECIAL PACKAGING INSTRUCTION	CODE ID 98747	SPI NO. (TPO) F01-252-4042
ITEM NOMENCLATURE PISTON ASSEMBLY		SHEET 2 OF 2

NSN'S THAT APPLY

1620-01-252-4042
1620-01-061-3239
1620-01-071-0538
1620-01-445-6131

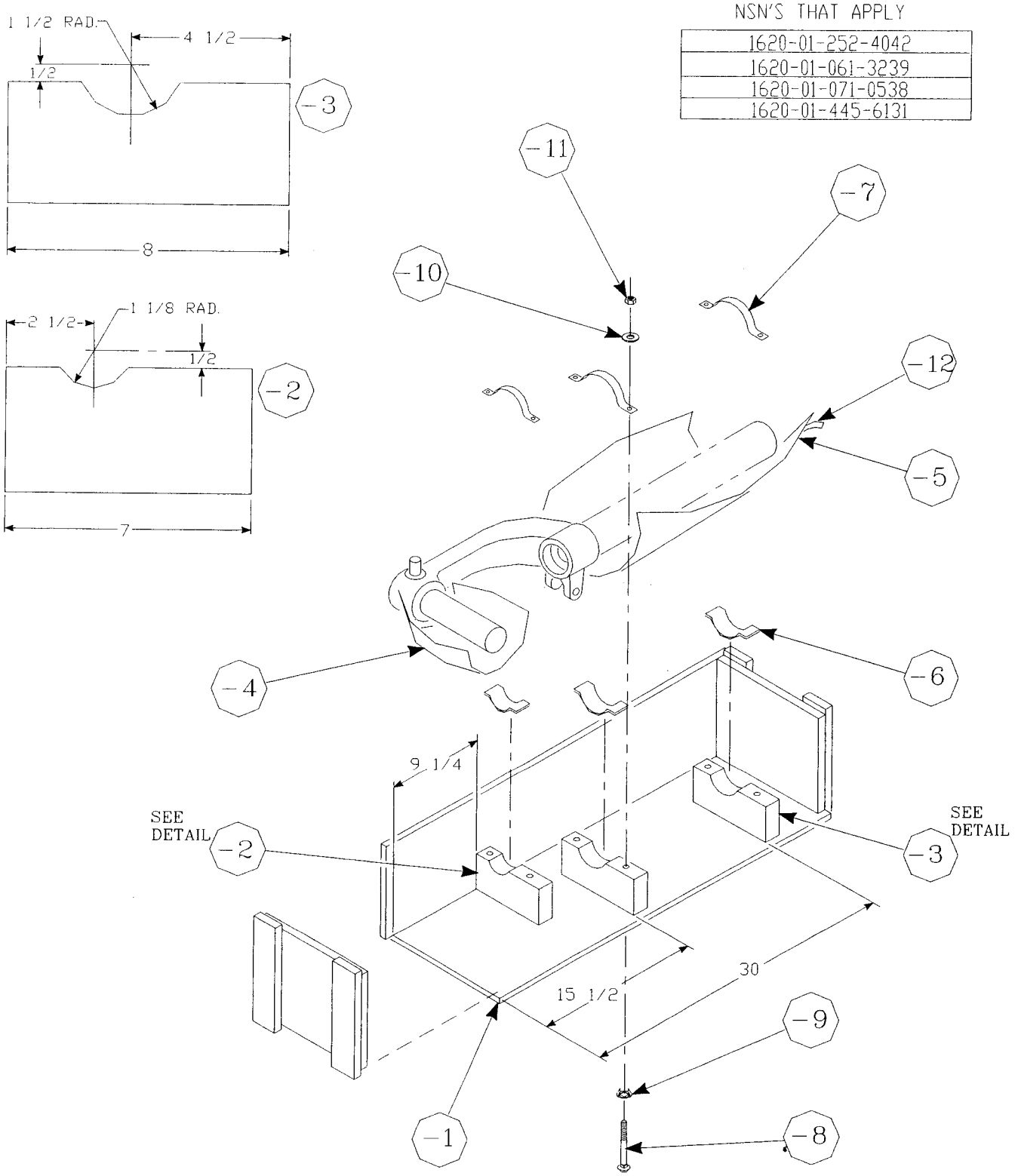

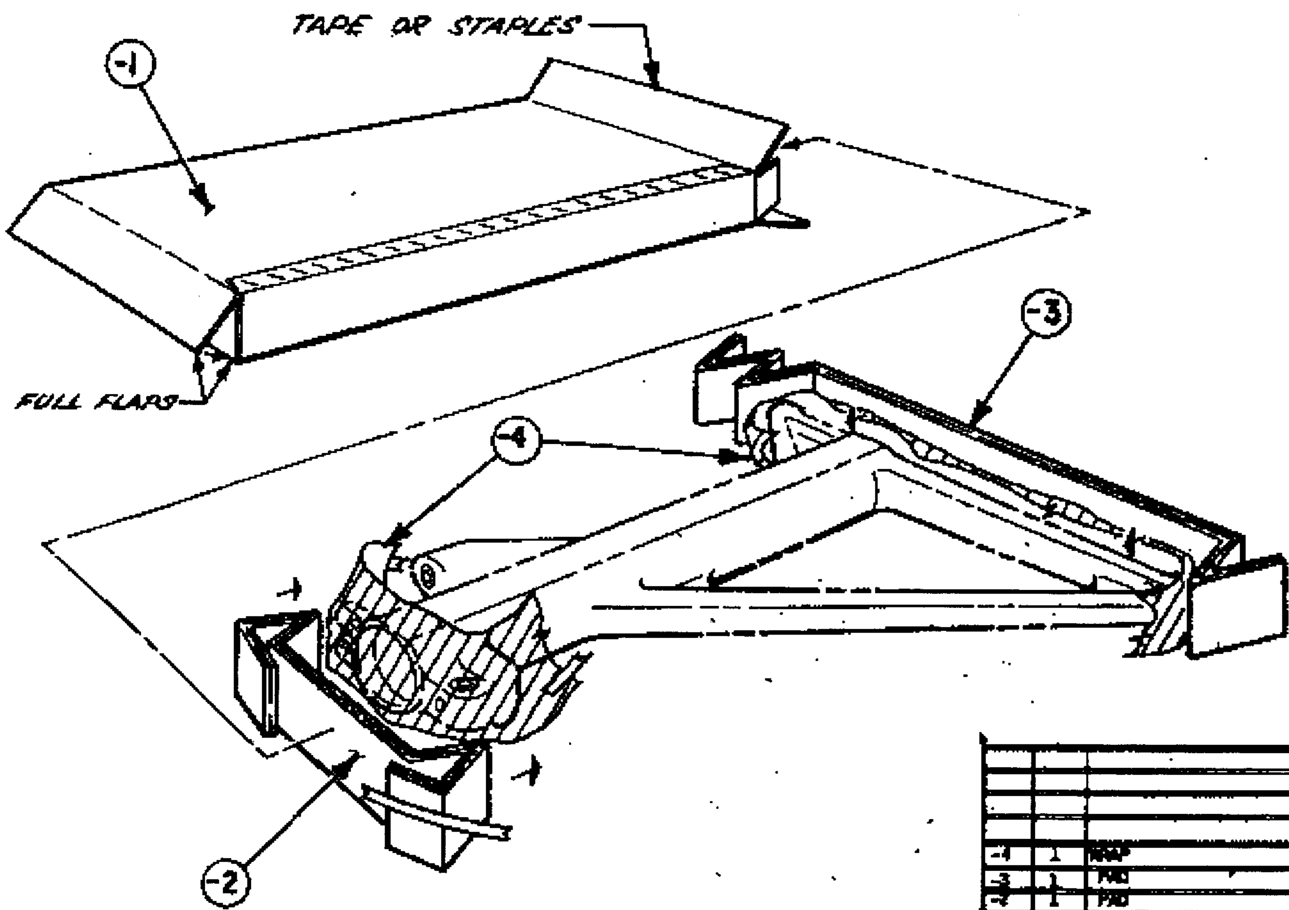

	LTR	DESCRIPTION	DATE	APPROVED
REV	G	SUPERSEDES DWG DATED 77077	79187	
REV	H	CHGD CARTON STYLE AND NOTE	81035	

PRESERVATION & PACKAGING
LEVEL A IN A/W MIL-P-116 METHOD I
LEVEL B IN A/W MIL-P-116 METHOD I
LEVEL C
CLEANING & DRYING IN A/W MIL-P-116
PRESERVATION COMPOUND SEE NOTE.
AMOUNT OF DESICCANT (UNITS) N/A
CLOSURE OF STRAPPING IN A/W PPP-B-636 {METHOD IV, DOMESTIC / METHOD V, OVERSEAS
MARKING IN A/W MIL-STD-129
SPECIAL MARKING INSTRUCTIONS: APPLICABLE SEE INSTRUCTIONS / NOT APPLICABLE

MARK: "TPO 00-011-0192", ON ONE SIDE OF CONTAINER

MARK: "REUSABLE CONTAINER-DO NOT DESTROY" ON ONE SIDE

NOTE:

MIL-C-16173 GRADE 2 SHALL BE APPLIED TO AXLES, CYLINDERS AND BUSHINGS, AND MIL-G-23827 TO BEARINGS. TREATED PARTS SHALL BE COVERED WITH MIL-B-121 BARRIER AND SECURED WITH PPP-T-60 TAPE.

ALTERNATE: WRAP CRITICAL AREAS AND BEARING WITH MIL-P-3420 NO. 40 VPI, TYPE I, CLASS 2, STYLE A, OR EQUAL.

REF	QTY	DESCRIPTION	SIZE	MATERIAL	SPECIFICATION
-4	1	WRAP	AS REQUIRED	BARRIER MATERIAL TYPE II GR A	MIL-B-121
-3	1	PAD	SEE DETAIL	FIBERBOARD DW GR 200	PPP-F-320
-2	1	PAD	SEE DETAIL	FIBERBOARD DW GR 200	PPP-F-320
-1	1	CONTAINER	27 1/4 X 19 3/4 X 3 7/8	FIBERBOARD, V3c, SW, TYPE CF	PPP-B-636

LIST OF MATERIALS

LEVEL	SPECIFICATION	SIZE I.D.	STYLE	TYPE	CLASS	VARIETY	GRADE	WT	CU
A	PPP-B-636	27 1/4 X 19 3/4x3 7/8	FOL	CF		SW	V3c	30	1.5
B	PPP-B-636	27 1/4 X 19 3/4x3 7/8	FOL	CF		SW	V3c	30	1.5
C	PPP-B-636	27 1/4 X 19 3/4x3 7/8	FOL	CF		SW	V3c	30	1.5
AIR									

EXTERIOR CONTAINER

NET WT 25 — OUTSIDE DIMENSIONS 27 3/4 X 20 1/4 X 4 3/8

PARTS LIST

QUANTITY REQUIRED PER DASH NO.

APPLICATION

U.S. AIR FORCE
OGDEN ALC HILL AFB UTAH

TITLE: CYLINDER F-5

SIZE C — TPO 00-011-0192

SCALE 1620 — SHEET 1 OF 2

REVISIONS			
LTR	DESCRIPTION	DATE	APPROVED

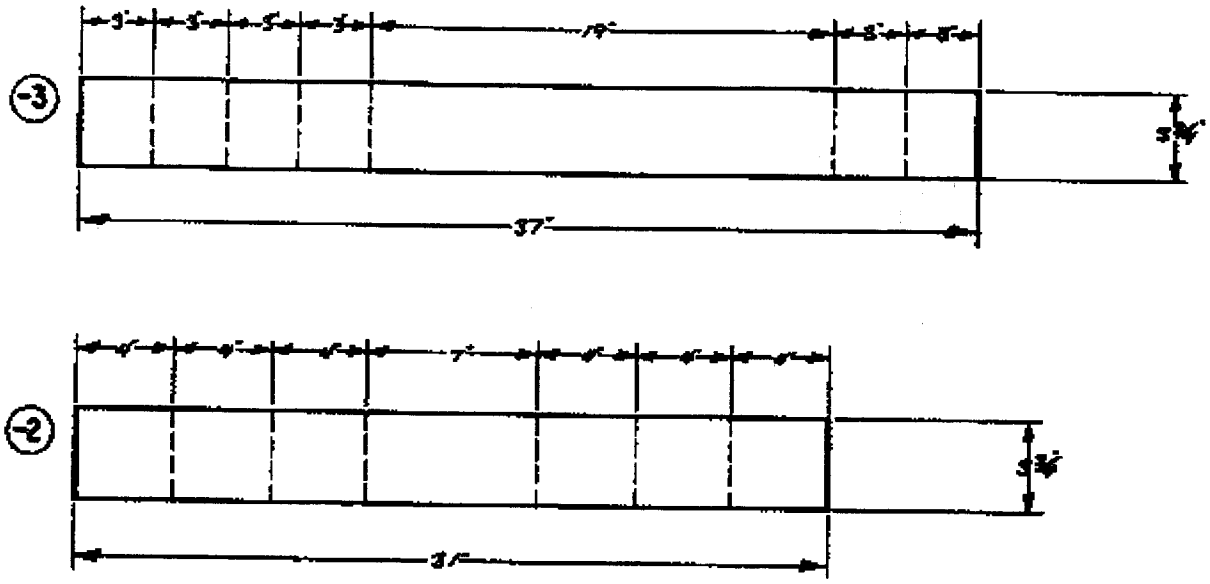

QUANTITY REQUIRED PER BASE NO.	SYM	NOMENCLATURE	DWG NUMBER	IDENTIFYING NO.	MATERIAL / SPECIFICATION	UNIT WT	ZONE	PART

PARTS LIST

U.S. AIR FORCE

TITLE

CYLINDER F-5

SIZE	CAGE CODE IDENTIFIER	DRAWING NO.
C		00-011-0192

SCALE 1/620 SHEET 2 of 2

APPLICATION

SPECIAL PACKAG G INSTRUCTION

9E 7

00-417-6249

SHEET 1 OF 4

PART OR DRAWING NO.	NATIONAL STOCK NO.	CURRENT REV
7926445	1620-00-417-6249	A

ILL. E. NYE

CHK. P. FRANCIS

ENGR. V. ELIZONDO

AUTH. B. EVANS

ITEM NOMENCLATURE

PISTON, LANDING GEAR, C-5

ORIGINAL DATE 81246

PRESERVATION IAW MIL-P-116

LEVEL A METHOD I
LEVEL B METHOD I
LEVEL C METHOD I
QUP 001
ICQ 000
CLEANING METHOD C-1
DRYING METHOD D-1
PRESERVATIVE MIL-C-16173, GRADE I

MARKING IAW MIL-STD-129

SPECIAL MARKINGS:
A) SPI NO. 00-417-6249 MARK THE SPI NUMBER ON ONE SIDE OF THE CONTAINER AND ON ALL REMOVABLE DUNNAGE.
B) CAUTION LIFT BY BASE ONLY
C) TO OPEN REMOVE LAG BOLTS
D) CENTER OF BALANCE (SEE NOTE 6)

-NOTICE-

ITEMS ALREADY PACKED ACCORDING TO PREVIOUS EDITIONS OF THIS SPI (TPO) DO NOT REQUIRE REPACKING.

PACKING AS SPECIFIED BELOW AND BILL OF MATERIALS

LEVEL	SPEC	STYLE	TYPE	CL	VRTY	GR
A	MIL-B-26195(MOD)	A	II	1		
B	MIL-B-26195(MOD)	A	I	1		
C	MIL-B-26195(MOD)	A	I	1		

	LEVEL A	LEVEL B	LEVEL C
GROSS CU FT	27.287	27.287	27.287
GROSS WT LBS	560	560	560
DESIGN FRAGILITY G	110	110	110

	LENGTH	WIDTH	DEPTH
CNTR I.D.	76	24	18
CNTR O.D.	78	26	23 1/4
ITEM DIM	71	17	14

ITEM WT LBS 423

REVISIONS

LTR	DESCRIPTION	DATE	APRVD
A	COMPLETELY REVISED, UPDATED,		
	AND REDRAWN	88347	

CLOSURE IN accordance WITH MIL-B-26195

22	22	CORNER STRAPS (SEE NOTE 4)	12 X 3/4 X .028	QQ-S-781 CLASS 1, TYPE II, REG DUTY, FIN A
21	3	JOISTS	1 X 4(NOM) X 24	MIL-STD-731 CLASS 2
20	12	LATERAL JOIST SUPPORTS	1 X 4(NOM) X 3 1/2	MIL-STD-731 CLASS 2
19	6	VERTICAL JOIST SUPPORTS	1 X 3(NOM) X 13	MIL-STD-731 CLASS 2
18	A/R	TAPE	AS REQUIRED X 2	PPP-T-76
17	1	WRAP	AS REQUIRED	MIL-B-121 TYPE I, GR A, CL 2
16	2	CHAFFING STRIPS	AS REQUIRED X 3 X 1/2	PPP-P-115 TYPE 1 OR EQUAL
15	2	STRAPPING	0.035 X 1 1/4 X A/R	QQ-S-781 CL 1, TYPE I, HVY DUTY, FIN A
14	12	NUTS	3/8	FF-N-836 TYPE II, STYLE 4
13	20	WASHERS	1/4	FF-W-92 TYPE A, GR I, CLASS A
12	12	WASHERS	3/8	FF-W-92 TYPE A, GR I, CLASS A
11	4	TORQUE WASHERS	TO FIT 3/8 BOLT	SEE NOTE 1 5310-00-936-9532
10	20	LAG BOLTS	2 1/2 X 1/4	FF-B-561 TYPE I, STYLE 1, GR B
9	6	BOLTS	13 X 3/8	FF-B-584 TYPE I, CLASS 1, STYLE A
8	6	BOLTS	7 X 3/8	FF-B-584 TYPE I, CLASS 1, STYLE A
7	2	SADDLE SUPPORTS	7 1/2 X 24 X 5/16	NN-P-530 GROUP B (SEE DETAIL)
6	2	SADDLE SUPPORTS	7 1/2 X 24 X 5/16	NN-P-530 GROUP B (SEE DETAIL)
5	1	BASE	76 X 24 X 3/4	NN-P-530 GROUP B
4	1	SADDLE	2 X 8(NOM) X 24	MIL-STD-731 CLASS 2 (SEE DETAIL)
3	1	SADDLE	2 X 8(NOM) X 24	MIL-STD-731 CLASS 2 (SEE DETAIL)
2	2	HEADERS	2 X 4(NOM) X 76	MIL-STD-731 CLASS 2
1	5	SKIDS	4 X 4(NOM) X 26	MIL-STD-731 CLASS 2
ITM	QTY REQD	NOMENCLATURE OR DESCRIPTION	SIZE (INCHES UNLESS SPECIFIED)	MATERIAL SPECIFICATION

SPI NO. 00-417-6249

DD FORM 2169 MOD

COMPUTER GENERATED

SPECIAL PACKAGING INSTRUCTION	CO' ID 98747	SPI NO. (TPO) 00-417-6249
ITEM NOMENCLATURE PISTON, LANDING GEAR C-5		SHEET 2 OF 4

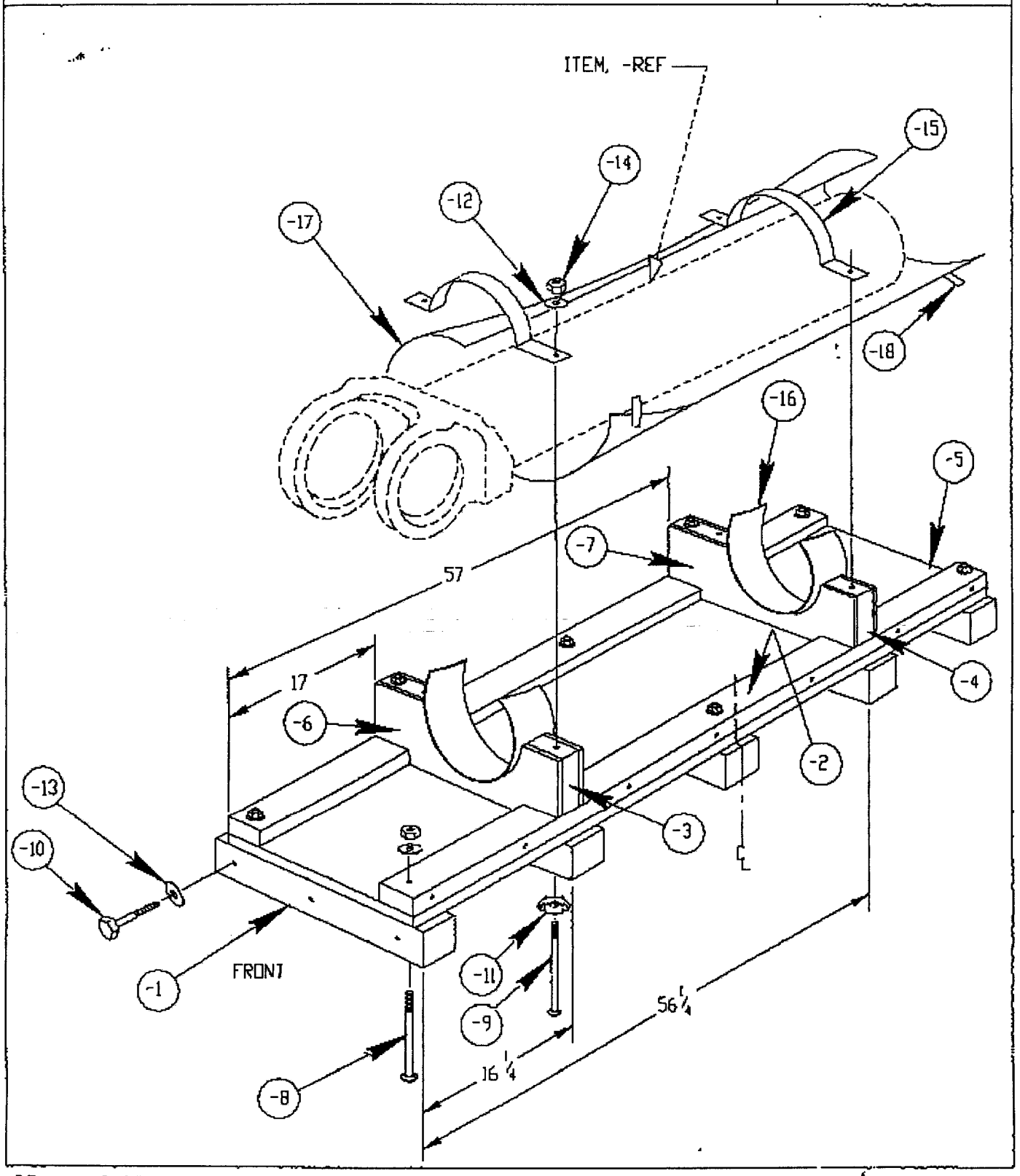

DD FORM MARCH 87 2169c MOD

COMPUTER GENERATED

SPECIAL PACKAGING INSTRUCTION	CE ID 98747	SPI NO. (TPO) 00-417-6249
ITEM NOMENCLATURE PISTON, LANDING GEAR C-S		SHEET 3 OF 4

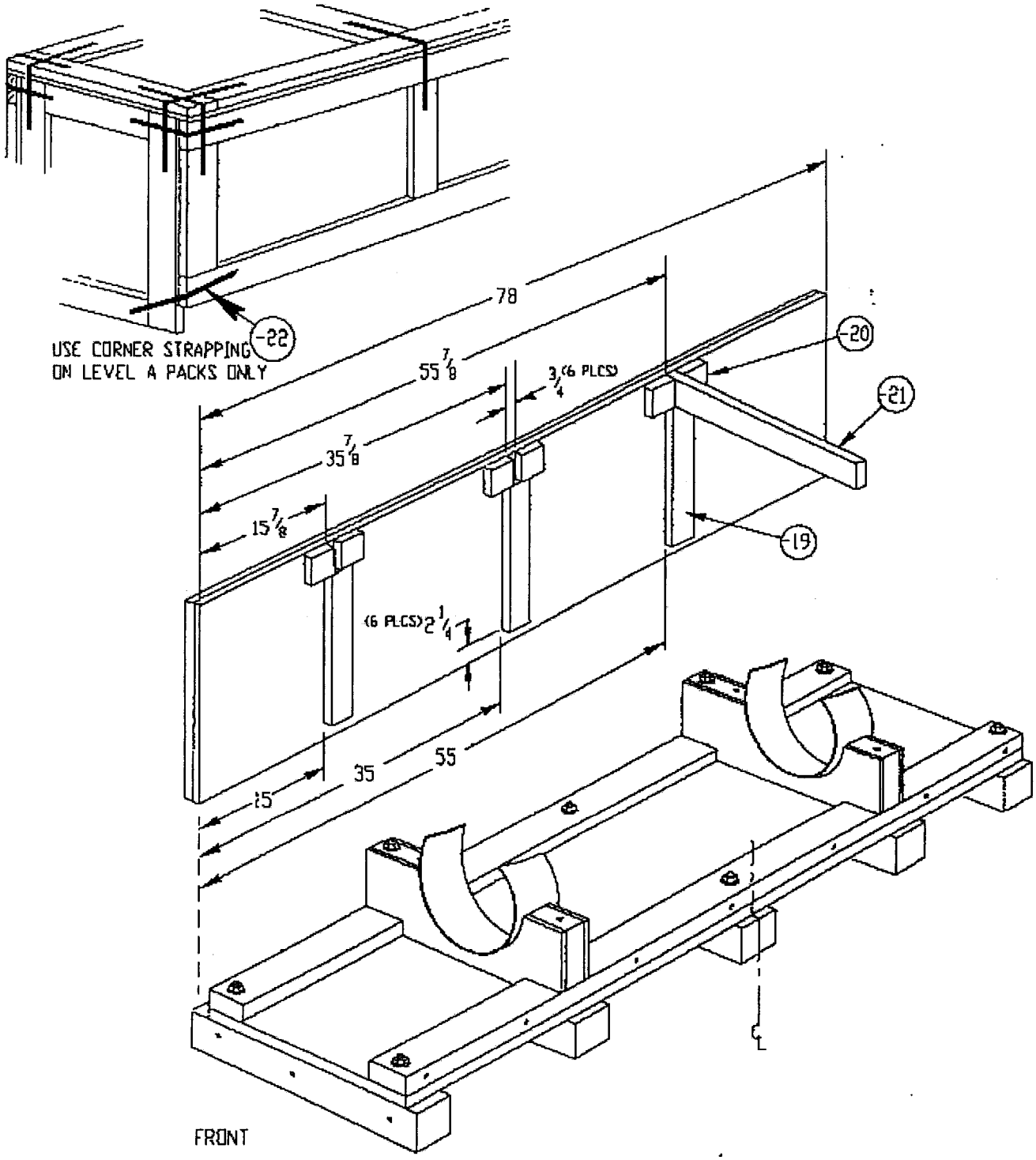

DD FORM MARCH 87 2169c MOD

COMPUTER GENERATED

SPECIAL PACKAGING INSTRUCTION

CL ID	SPI NO. (TPO)
98747	00-417-6249

ITEM NOMENCLATURE

PISTON, LANDING GEAR C-5

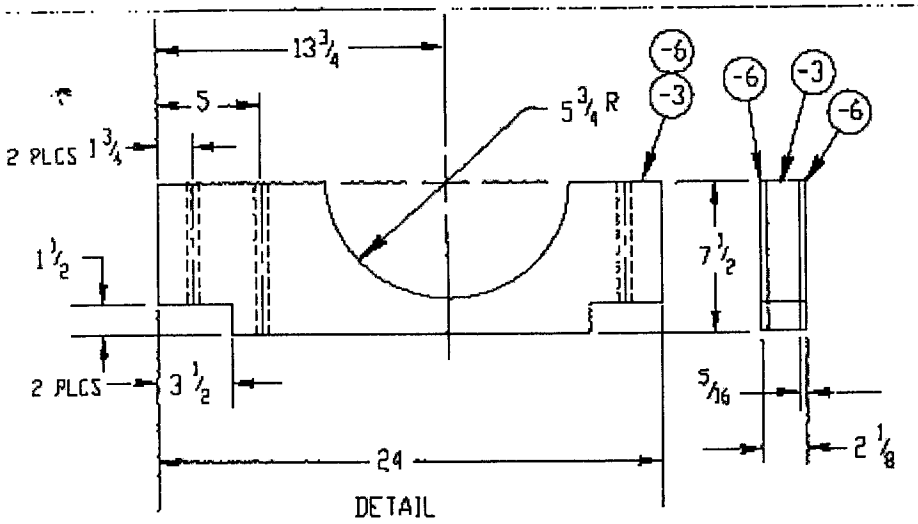

DETAIL

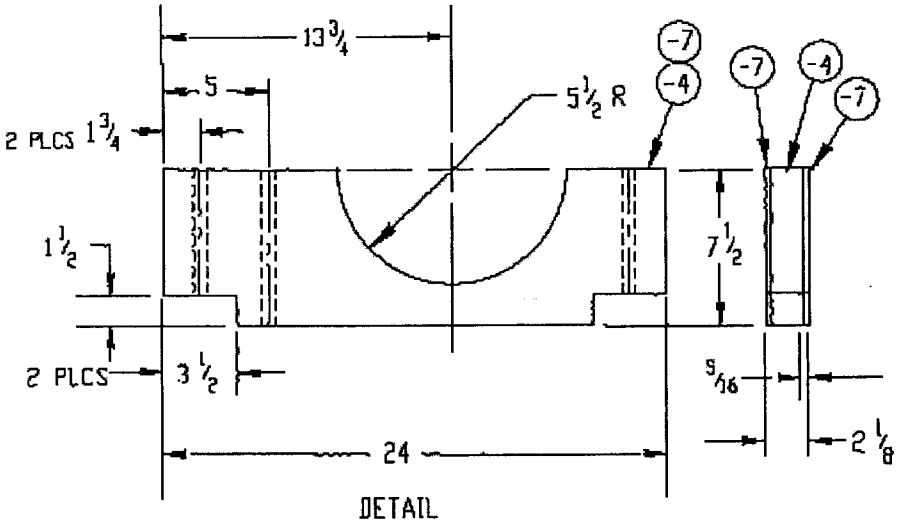

DETAIL

NOTES:

1. SOURCE OF SUPPLY FOR TORQUE WASHERS, CATALOG NO. MS-98398K2915:

   TRW FASTENER DIV.
   31 AMES STREET
   CAMBRIDGE MASS. 02142

2. PRESERVE CRITICAL AREAS WITH MIL-C-16173, GRADE I OR EQUAL. WRAP IN -17 USING -18 TO SECURE WRAP.

3. CHAFFING STRIP, -16, SHALL BE USED AT ALL POINTS WHERE ITEM WOULD OTHERWISE CONTACT WOOD BLOCKING OR METAL STRAPPING.

4. SADDLE SUPPORTS, -6 AND -7, SHALL BE SECURED TO SADDLES -3 AND -4; AND CORNER STRAPS, -22, TO CONTAINER USING 3d NAILS CONFORMING TO FF-N-105, TYPE II OR EQUAL.

5. EXTERIOR CLEATS WILL HAVE THE SAME SPACING AS VERTICAL JOIST SUPPORTS. VERTICAL AND LATERAL JOIST SUPPORTS SHALL BE SECURED TO SIDE PANELS AND CLEATS USING 6d NAILS CONFORMING TO FF-N-105, TYPE II OR EQUAL.

6. CENTER OF BALANCE WILL BE MARKED ON OUTSIDE OF CONTAINER IAW MIL-STD-129 PARA 20.27.

SPECIAL PACKAGING INSTRUCTION

CODE ID	SPI NO. (TPO)
98747	00-195-4810
	SHEET 1 OF 3

PART OR DRAWING NO.	NATIONAL STOCK NO.	CURRENT REV
7327022-30	1620-00-195-4810	

ITEM NOMENCLATURE
CYLINDER, LANDING GEAR

ORIGINAL DATE 85343

ILL D. HEISE
CHK C. KLEEB
ENGR S. MORAN
AUTH R. ELBRADER

PRESERVATION IAW MIL-P-116

LEVEL A METHOD	I
LEVEL B METHOD	I
LEVEL C METHOD	I
QUP	1 EA.
ICQ	N/A
CLEANING	C-1
DRYING	D-1
PRESERVATIVE	MIL-P-3420 (SEE NOTE)

MARKING IAW MIL-STD-129

SPECIAL MARKINGS:

A) SPI NO. 00-195-4810

B) MARK THE SPI NUMBER ON ONE SIDE OF THE CONTAINER, AND ON ALL REMOVABLE DUNNAGE.

CLOSURE IN A/W: MIL-B-26195 AND THIS DRAWING.

- NOTICE -

CONSULT YOUR MICROFICHE SPI (TPO) CROSS REFERENCE FILE TO DETERMINE LATEST SPI (TPO) IN EFFECT (SEE AFR 71-9, PARA 13-9).

PACKING AS SPECIFIED BELOW AND BILL OF MATERIALS

LEVEL	SPEC	STYLE	TYPE	CL	VRTY	GR
A	MIL-B-26195 (MOD)	A	II	1		
B	MIL-B-26195 (MOD)	A	I	1		
C	MIL-B-26195 (MOD)	A	I	1		

	LEVEL A	LEVEL B	LEVEL C
GROSS CU FT	19.3	19.3	19.3
GROSS WT LBS	212	212	212
DESIGN FRAGILITY G	100	100	100
	LENGTH	WIDTH	DEPTH
CNTNR I.D.	56	26	15½
CNTNR O.D.			
LEVEL A	58	28	20½
LEVEL B & C	58	28	20½
ITEM DIM	52	23	12¾
ITEM WT LBS	118		

SOURCE OF SUPPLY FOR TORQUE WASHER:
CATALOG NUMBER MS-98398
CARR FASTENER CO.
31 AMES ST.
CAMBRIDGE, MASS. 02142

UNLESS OTHERWISE SPECIFIED, DIMENSIONS WILL BE IN INCHES.
TOLERANCES: FRACTIONS; + OR - 1/8,
DECIMALS; + OR - .125.

PART NO.	QTY REQD	NOMENCLATURE OR DESCRIPTION	SIZE (INCHES UNLESS SPECIFIED)	MATERIAL SPECIFICATION	
-19	A/R	BARRIER, VPI	A/R	MIL-P-3420	TYPE I, CL 1, STYLE C
-18	A/R	TAPE	½ X A/R	PPP-T-97	TYPE IV
-17	3	CHAFFING STRIPS	3 X A/R	PPP-P-115	TYPE I, OR EQUAL
-16	4	TORQUE WASHERS	TO FIT ⅜ BOLTS	MS-98398	
-15	10	WASHERS	⅜	FF-W-92	TYPE A, GR I, CL A
-14	16	WASHERS	¼	FF-W-92	TYPE A, GR I, CL A
-13	16	LAG BOLTS	2½ X ¼	FF-B-561	TYPE I, STYLE 1, GR B
-12	2	BOLTS	3½ X ⅜	FF-B-584	TYPE I, CL 1, STYLE A
-11	2	BOLTS	8½ X ⅜	FF-B-584	TYPE I, CL 1, STYLE A
-10	6	BOLTS	6 X ⅜	FF-B-584	TYPE I, CL 1, STYLE A
-9	18	CORNER STRAPS	12 X ¾ X .028	QQ-S-781	CL 1, TYPE II, FIN A
-8	2	HOLD DOWN STRAPS	1¼ X .035 X A/R	QQ-S-781	CL 1, TYPE I, HVY DUTY, FIN A
-7	1	BASE SUPPORT (SEE DET.)	22⅞ X 7¼ X ½	NN-P-530	GROUP B
-6	2	SADDLE SUPPORTS	26 X 7¼ X 5/16	NN-P-530	GROUP B
-5	1	BASE	56 X 26 X ½	NN-P-530	GROUP B
-4	1	BASE SUPPORT (SEE DET.)	2 X 8 (NOM) X 22⅞	MIL-STD-731	CLASS 2
-3	1	SADDLE (SEE DETAIL)	2 X 8 (NOM) X 26	MIL-STD-731	CLASS 2
-2	2	HEADERS	2 X 2 (NOM) X 52	MIL-STD-731	CLASS 2
-1	3	SKIDS	4 X 4 (NOM) X 28	MIL-STD-731	CLASS 2

SPECIAL PACKAGING INSTRUCTION	CODE ID 98747	SPI NO. (TPO) 00-195-4810
ITEM NOMENCLATURE CYLINDER, LANDING GEAR		SHEET 2 OF 3

NOTES:

1. WRAP CRITICAL AREAS WITH REF-19 AND SECURE WITH REF-18.

2. SECURE REF-6 TO REF-3 AND REF-7 TO REF-4 WITH 8d NAILS. ALSO SECURE REF-9 TO CONTAINER WITH 3d NAILS. ALL NAILS WILL CONFORM TO FF-N-105, TYPE II, STYLE 4.

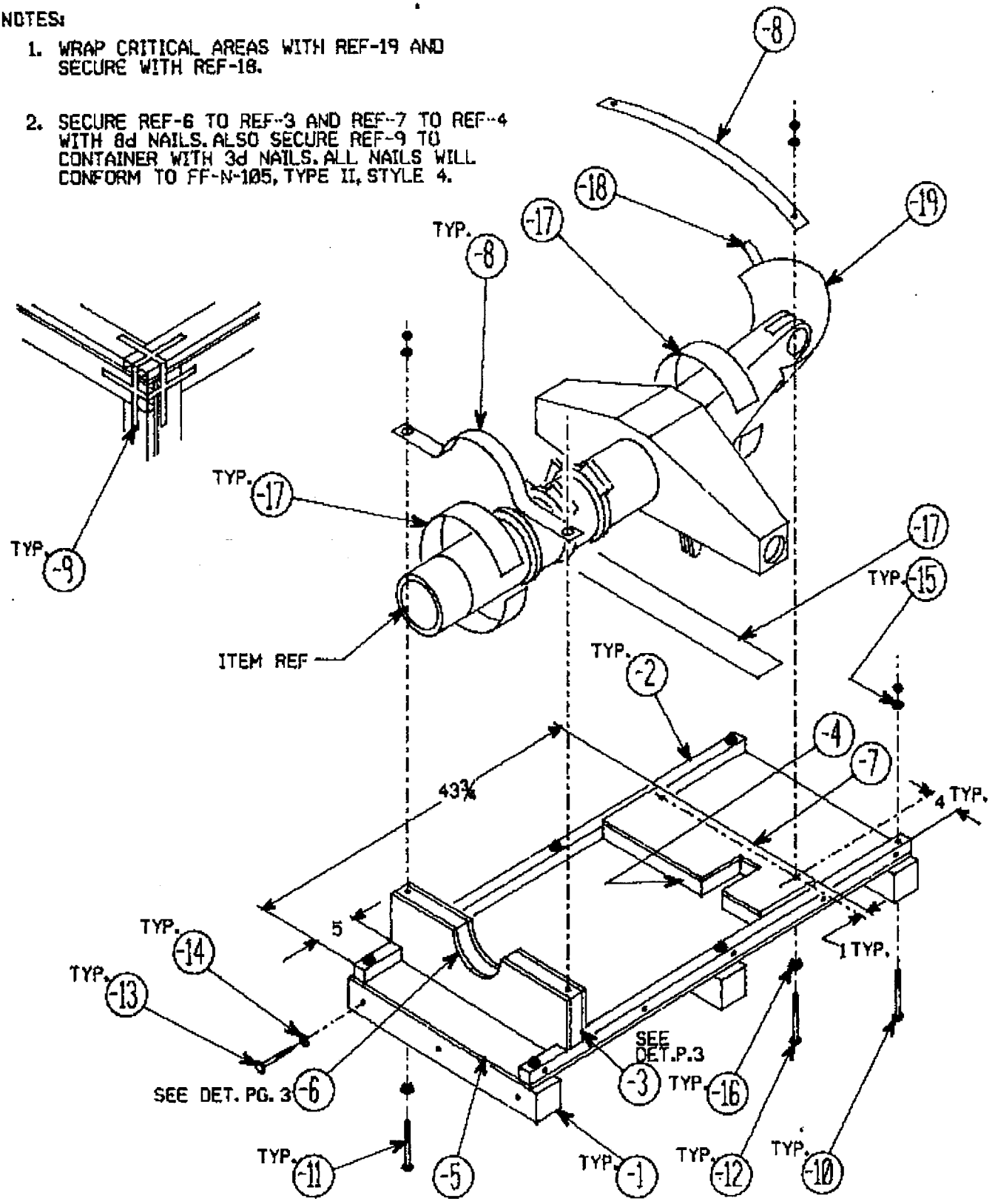

SPI NO. 00-195-4810

SPECIAL PACKAGING INSTRUCTION	CODE ID 98747	SPI NO. (TPO) 00-195-4810
ITEM NOMENCLATURE CYLINDER, LANDING GEAR		SHEET 3 OF 3

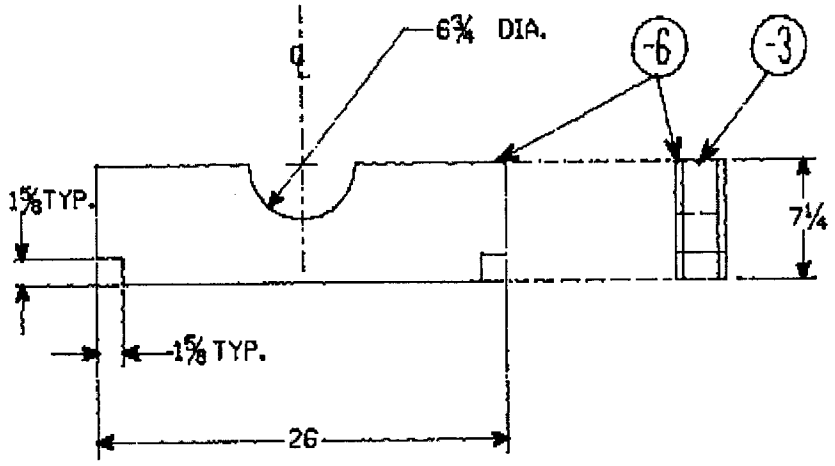

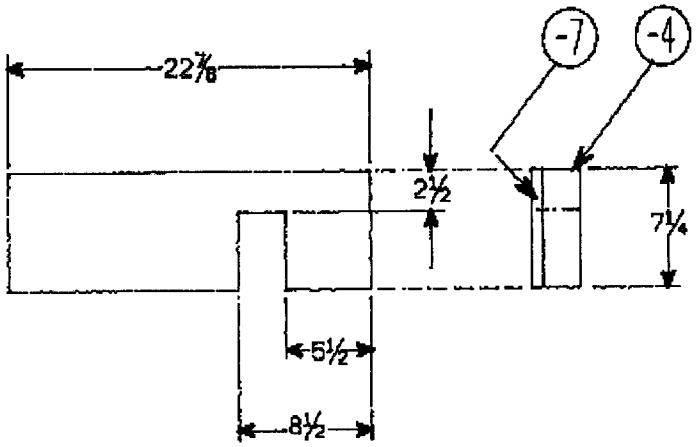

SPI NO. 00-195-4810

REVISION: *01*

ENGINEERING DATA LIST

* HISTORY *

DATE :	DATA TECH :	ORGN SYMBOL :	PR NR :	APPLICATION:	PAGE
23APR03	SDA	LGMPM		A-10 AIRCRAFT	1 OF 1

CAGE:	MANUFACTURER NAME:	REFERENCE NR:	NOUN :	NSN :
77751	FAIRCHILD INDUSTRIES FARMINGDALE NY	19042-1	PISTON SUBASSY, SHOCK STRUT MLG	1620010184758

CAGE	DRAWING NUMBER	REV	NR SHEETS	NR CARDS	FURN CODE	DIST CODE	NOUN	REQUIREMENTS
98747	OO-ALC/LGMPM /		0004	0000	S		ENGR DATA RQMTS (ATTACH A)	
77751	19040 /	G	0002	0000	S		PISTON TUBE - FORGING SH ST, MLG	
77751	19041 /	J	0001	0000	S		PISTON - MACHINGING SH ST, MLG	
77751	19042 /	D	0001	0000	S		PISTON SUBASSY SHOCK STRUT, MLG	
77751	19091 /	D	0001	0000	S		ADAPTER ANTISKID SH ST, MLG	
77751	19092 /	C	0001	0000	S		ADAPTER, SUBASSY SH ST, MLG	
77751	19093 /	H	0001	0000	S		BUSHING - MLG	

STANDARD ENGINEERING TEXT

ALL GOVERNMENT/MILITARY SPECIFICATIONS AND STANDARDS WILL NOT BE FURNISHED.
TO OBTAIN THESE SPECS AND STDS WRITE TO:
DODSSP
BUILDING 4/SECTION D
700 ROBINS AVE.
PHILADELPHIA PA. 19111-5098
TELEPHONE: (215) 697-2179
FAX: (215) 697-1462 TO VIEW OR ORDER: HTTP://WWW.DODSSP.DAPS.MIL

ENGINEERING DATA LIST REMARKS

FURNISHED METHOD CODE LEGEND:

C - CLASSIFIED DOCUMENT.
S - FURNISHED WITH SOLICITATION.
M - STABLE BASE DRAWING REQUIRED; FURNISHED WITH CONTRACT AWARD.
X - DATA SUPPLIED (NOT IN EDCARS).
R - FURNISHED BY PCD UPON REQUEST.
P - PARTIAL DOCUMENT FURNISHED.
V - VENDOR DRAWING; (NOT PROVIDED).
G - GOV'T DOCUMENT.
O - OTHERS, CONTRACTOR MUST ACQUIRE.
A - DATA NOT AVAILABLE

REV:	ENGINEERING DATA REQUIREMENTS (ATTACHMENT "A")

NOTE: MILITARY SPECIFICATIONS I/STANDARDS WILL NOT BE FURNISHED IN THE BID SET.

1. THE FOLLOWING INSTRUCTIONS ARE FURNISHED FOR THE MANUFACTURE OF

PISTON SUBASSY-SHOCK STRUT, MLG A-10

2. PART NUMBER	3. NATIONAL STOCK NUMBER
19042-1	1620-01-018-4758

4. THE FOLLOWING SPECIFICATIONS/STANDARDS, ETC., WILL BE USED IN LIEU OF THE DATA INDICATED. THE SUPERSEDED DATA WILL NOT BE FURNISHED UNLESS SO INDICATED.

5. Per Drawing requirements 19040, use Material SAE AMS-F-7190 in lieu of MIL-F-7190 and SAE AMS 6411 in lieu of AMS 6411.

6. Per Drawing requirements 19091, use Material SAE AMS -QQ-A-200/11 in lieu of QQ-A-200/11. Alternate Material, use SAE AMS-QQ-A-225/4 in lieu of QQ-A-225/4.

7. Per Drawing requirements 19093, use Material SAE AMS 5643 in lieu of AMS 5643.

8. Mark & Identify per MIL-STD-130 in lieu of Z-R701.

9. For large assemblies and components utilize the following statement in lieu of PS 16001) Serial number shall be vibropeened, or steel stamped, in 0.09" letters 0.004"-0.007" deep in the location indicated. If the drawing does not indicate a location, OO-ALC/LGHLEN will provide S/N location instructions. Serialization of item shall be accomplished as follows: The serialization will begin with the CAGE of the contractor named on the contract, followed by a dash and the 2 digit year of manufacture, followed by a dash and a sequentially unique 3 digit number. A contractor who receives numerous intermittent contracts will start serialization of item with the next number in sequence of the prior contract. If a contract produces more than 999 items, the serial number should begin using 4 digit serial numbers. The serial number should appear like this: S/N 98747-03-001."

10. Inspection requirements are as follows:

    A. Perform fluorescent penetrant inspection per ASTM E1417, Type I, Method B or C, Level 3 or 4) in lieu of MIL-I-6866 and MIL-I-25135 with the following acceptance/rejection criteria: NO DEFECTS ALLOWED. The intent of "NO DEFECTS ALLOWED" is that the inspection is conducted at the required sensitivity level and there will be no indications allowed. The inspector performing the inspection shall be certified to Level II with the inspection procedure developed by a Level III as specified in NAS 410.

    B. Perform Magnetic particle inspection per ASTM E1444 in lieu of MIL-I-6868. Use full wave direct current (FWDC), wet continuous method, fluorescent type with the following acceptance/rejection criteria: NO DEFECTS ALLOWED. The intent of NO DEFECTS ALLOWED is that the inspection is conducted at the required sensitivity level and there shall be no indications allowed. The inspector performing the inspection shall be certified to Level II with the inspection procedure developed by a Level III as specified in NAS-410.

11. Use best shop practices in lieu of the following:

    A. Machining Spec F-F101.

    B. Protect Unplated Surfaces Spec Z-P801.

PREPARED BY	SYMBOL	DATE
DAVID H. ARGYLE	LGMPM	14 Apr 03

REV:	ENGINEERING DATA REQUIREMENTS CONTINUATION SHEET *(ATTACHMENT "A")*
PART NUMBER 19042-1	NATIONAL STOCK NUMBER 1620-01-018-4758

12. Heat Treat Steel per SAE AMS-H-6875 in lieu of MIL-H-6875.

13. For parts Heat-Treated to 180 KSI and above, any surface that is ground/machined after heat treat, shall be inspected for abusive grinding/machining burns per MIL-STD-867. Grinding shall be per MIL-STD-866.

14. Shot Peen per Drawing requirements and SAE AMS -S-13165 in lieu of MIL-S-13165.

15. Passivate per SAE AMS-QQ-P-35 or ASTM A967 in lieu of Z-R901, Code SZ.

16. Titanium Cadmium Plate per MIL-STD-1500 (Type II, Class 2) on Drawing 19041 and (Type II, Class 3) on Drawing 19093 in lieu of F-T402.

17. Finish Paint Scheme as follows in lieu of Z-R901, CODE ZB, ZC, and ZZ.

    A. Apply one coat Epoxy Waterborne primer per MIL-PRF-85582, Type I, Class 2. Alternate primer, one coat Epoxy-Polamide per MIL-PRF-23377, Type I.

    B. Apply two topcoats of Polyurethane per MIL-PRF-85285, Type I, color #17925 (White) per FED-STD-595.

18. After contract award the successful bidder shall provide a copy of the processing documentation (routing documents and process specifications) to LGHLEN for final review before production begins.

19. OO-ALC/LGHLEN system engineering retains all rights to review and accept MRB'S prior to shipment of discrepant items, All deviations, minor and major, from the engineering drawing package will be submitted for MRB disposition.

20. Prior to contract award, the contractor will certify to the government in writing, full compliance with manuals, specifications, and standards called out and required for the manufacture of this contracted landing gear component/assembly. Contractor is responsible to completely search these manuals, specifications, and standards and fully understand the requirements necessary to manufacture landing gear components. Any questions can be forwarded to this office, OO-ALC/LGHLEN.

PREPARED BY	SYMBOL	DATE
DAVID H. ARGYLE	LGMPM	14 Apr 03

21. Install Bushings per the following in lieu of G-F501:

A. The bushing installations shall be accomplished in such a manner as to avoid damage to the finish on the I.D. of the housing into which the bushing is installed, or the finish of the O.D. of the bushing. Forced installation of sub-zero installations, such as the use of a press or hammer is not permitted, and is not acceptable. A small non-metallic hammer may be used to tap the bushing into alignment with the housing bore, or to seat the bushing.

B. Prior to bushing installation, the parts and housing bore shall be cleaned with a cleaning solvent to remove all contamination.

C. Liquid nitrogen shall be used for all sub-zero installations unless some other sub-zero coolant is specified, and approved by OO-ALC/LGHLEN Engineering. The soak time of the bushing in the liquid nitrogen shall be sufficient allow the bushing to reach the same temperature as the coolant.

D. The bushing shall be installed into the housing immediately upon removal from the coolant with an absolute minimum of lost time. Trial runs shall be accomplished as necessary to minimize installation time which should be in the order of about seven (7) seconds maximum.

E. It may occasionally be necessary to heat the housing into which the bushing is to be installed, in addition to sub-zero cooling of the bushing. Detail parts in process, which do not have paint or sealant or other organic material applied prior to heating, shall be heated by the use of radiant heat techniques, such as thermal blankets, infrared lamps etc.; to the maximum temperature of 250 F.Temperature measuring devices shall be used to monitor heat and shall be located on areas of the part expected to reach maximum temperature. No scaling oxidation, or corrosion shall be permitted.

F. Bushings without flanges shall be installed into housing bore which has received a light coat of sealant per MIL-PRF-81733. Install shrunken bushing and wipe off any excess sealant that may have extruded aroumd the periphery of both ends of the bushings.

G. Bushings with flanges shall be installed in a similar manner as paragraph (F). Except sealant shall also be applied to face of lug under flange. Sealant shall be applied in such a manner as to ensure complete coverage of inside face of bushing flange when bushing is installed. Wipe off any excess sealant around periphery of bushing flange forming a bead. Wipe any excess sealant from the other end of the bushing also.

H. For bushings with external grease grooves the inside of the lug will be coated with MIL-C-16173 prior to bushing installation, and face of lug will be coated with MIL-PRF-81733 per paragraph G.

22. The required forging shall be procured from the qualified forging source, using the original certified forging procedures and dies/tooling.

    A. Prior to contract award, the detail part bidder shall provide certification, from the forging source, to the Government that the certified dies and procedures are available and that the forging source has an agreement with the detail parts bidder to provide forgings for their use in the event they are the successful bidder.

    B. Prior to production, forging lot qualification shall be accomplished as specified on the forging drawing and SAE AMS-F-7190 (STEEL). The detailed part contractor shall assure that this has been accomplished by the forging source and shall submit certified documentation of accomplishment to the Government.

23. FORGING SOURCE, CONTROL AND LOCATION OF DIES:

    1. Forging Drawing: FAIRCHILD Drawing 19040-1

    2. Die Number: 7017B

    3. Control of Forging Process: Kropp Forge Company

    4. Location of Forging Dies: Kropp Forge Company
       A Division of Anadite, Inc.
       5301 W. Roosevelt Road
       Cicero, IL 60650
       Phone: 708-652-6691

SOURCE QUALIFICATION REQUIREMENTS
(PL98-525, SECTION 2319)

STOCK NR (NSN): 1620-01-018-4758
NOUN: Piston Subassy, Shock Strut MLG

PART NUMBER (P/N): 19042-1
AIRCRAFT: A-10

SECTION C.

QUALIFICATION REQUIREMENTS THAT MUST BE SATISFIED TO BECOME A QUALIFIED SOURCE:

1. Because of the need for uninterrupted item support to military aircraft systems while keeping with the requirements of PL 98-525, the current acquisition need not and generally will not be delayed to provide an offeror an opportunity to qualify. Normal acquisition practices at OO-ALC should preclude the denial of opportunity to any interested offeror.

2. The offeror must provide a pre-contract award qualification article, which meets the requirements of the engineering drawings, material specifications, and process specifications. However, successful completion of the qualification testing does not guarantee any contract award. If the offeror is deemed qualified and awarded the contract, a post-contract award first article exhibit may be required to verify production capability.

3. The qualification article will be subjected to form, fit, and function verification as well as required testing to assure compliance with data list and other applicable procurement criteria. The qualification article shall demonstrate full compatibility and comparability with existing parts.

4. The required materials will be procured from a qualified source and shall meet the requirements of their respective specifications. The offeror will assure that the supplier has accomplished this and shall submit certified documentation of accomplishment of the above requirements to the purchaser along with the pre-contract award qualification article.

5. The required forgings shall be procured from the qualified forging source using the original certified forging procedures and dies. Forging material and lot qualifications shall be accomplished as required in the specified forging drawing, P/N 19040 and specification SAE-AMS-F-7190. The offeror shall assure that this is or has been accomplished by the forging source and will submit certified documentation of accomplishment of the above requirements to the government along with the pre-contract award qualification article.

6. The qualification article once submitted will become subject to such testing as deemed necessary by the U.S. Government to prove that the article meets all dimensional, processing and functional requirements. Such testing may result in the destruction of the article. Following completion of necessary testing and evaluation, the article no matter what its condition shall be returned to the contractor or disposed of at his discretion and direction whether it was found acceptable or not.

7. Form verification: The U.S. Government's Quality Verification Center (QVC) will be used to insure compliance with the dimensional requirements of the article. Material and processing compliance will also be verified as required.

8. Fit/function verification: Existing components and government test stands and fixtures will be utilized to verify physical interface and functional performance of articles.

9. Testing for material and process compliance.

(a) Material analysis
(b) Heat treat
(c) Grinding
(d) Plating
(e) Finish
(f) Grain flow
(g) Other

SOURCE QUALIFICATION REQUIREMENTS
(PL98-525, SECTION 2319)

STOCK NR (NSN): 1'620-01-018-4758
NOUN: Piston Subassy, Shock Strut MLG

PART NUMBER (P/N): 19042-1
AIRCRAFT: A-10

10. Remarks:

a. Organic verification capabilities exist at OO-ALC.

b. Testing requirements outside organic capabilities will be contracted out.

11. The estimated cost of government testing and evaluation is $3000.

12. Maximum time for testing of the qualification article will not exceed 30 days from receipt at testing agency.

SECTION D.

QUALIFICATION WAIVER REQUIREMENTS.

1. An offerer who has had previous experience in the manufacture and qualification of items, which can be correlated with this product, may apply to the design control authority at OO-ALC for a waiver of the above stated qualification requirements.

a. The qualification waiver criteria utilized by the design control authority to perform a qualification analysis are available upon request. The qualification waiver criteria may be used as a guide in preparing the offerer's written input to the design control authority.

b. The burden of proof for written inputs is on the offerer. The design control authority will not pursue authenticity verification of claims made by the offerer of product manufacturing experience with other Government or non-Government agencies. Unsubstantiated claims will not be considered in the waiver analysis process.

c. This waiver will be granted if and only if the design control authority (LGHEL) can establish the qualifications of the offerer through the evaluation of written inputs from the offerer or from previous knowledge of the offerer's capabilities or from previous experience with the offerer on similar item acquisitions. If there is any doubt about the offerer's capability, the offerer will be required to submit a pre-qualification article. There is no guarantee of qualification by similarity. LGHEL reserves the right to require a pre-qualification article of all offerers.

2. The current acquisition need not and will not be delayed in order to provide an offerer with an opportunity to meet the requirements for qualification waiver.

3. Maximum time for approval of qualification by similarity will not exceed 15 days.

REVISION: *02*

ENGINEERING DATA LIST

* HISTORY *

DATE :	DATA TECH :	ORGN SYMBOL :	PR NR :	APPLICATION:	PAGE
05MAY03	SDA	LGMPM		A-10	1 OF 1

CAGE:	MANUFACTURER NAME:	REFERENCE NR:	NOUN :	NSN :
98747	OGDEN AIR LOGISTICS CENTER OGDEN	9927116-30	CYLINDER ASSEMBLY	1620014676214

CAGE	DRAWING NUMBER	REV	NR SHEETS	NR CARDS	FURN CODE	DIST CODE	NOUN	REQUIREMENTS
98747	OO-ALC/LGMPM FORM 462 /		0003	0000	S		ENG.DATA RQMNTS.(ATTACHMENT "A")	
77751	18795 /	F	0002	0000	S		CYLINDER-FORGING SHK.STRUT N.L.G	
77751	18796 /	J	0001	0000	S		CYLINDER MACH.SHOCK STRUT N.L.G.	
77751	18797 /	F	0001	0000	S		CYLINDER SUBASSY.SHK.STRT.N.L.G.	
77751	18825 /	C	0001	0000	S		SLEEVE STEERING SHK.STRUT N.L.G.	
77751	18832 /	E	0001	0000	S		BUSHING NOSE LANDING GEAR	
	/93C403							ECO
98747	9927116 /		0003	0000	S		SHOCK STRUT ASSY-N.L.G.	

STANDARD ENGINEERING TEXT

ENGINEERING DATA LIST REMARKS

FURNISHED METHOD CODE LEGEND:

C - CLASSIFIED DOCUMENT.
S - FURNISHED WITH SOLICITATION.
M - STABLE BASE DRAWING REQUIRED; FURNISHED WITH CONTRACT AWARD.
X - DATA SUPPLIED (NOT IN EDCARS).
R - FURNISHED BY PCD UPON REQUEST.
P - PARTIAL DOCUMENT FURNISHED.
V - VENDOR DRAWING; (NOT PROVIDED).
G - GOV'T DOCUMENT.
O - OTHERS, CONTRACTOR MUST ACQUIRE.
A - DATA NOT AVAILABLE

REV:	ENGINEERING DATA REQUIREMENTS (ATTACHMENT "A")

NOTE: MILITARY SPECIFICATIONS I/STANDARDS WILL NOT BE FURNISHED IN THE BID SET.

1. THE FOLLOWING INSTRUCTIONS ARE FURNISHED FOR THE MANUFACTURE OF

SHOCK STRUT ASSY-NOSE LANDING GEAR A-10

2. PART NUMBER	3. NATIONAL STOCK NUMBER
9927116-30	1620-01-467-6214

4. THE FOLLOWING SPECIFICATIONS/STANDARDS, ETC., WILL BE USED IN LIEU OF THE DATA INDICATED. THE SUPERSEDED DATA WILL NOT BE FURNISHED UNLESS SO INDICATED.

5. Use Material SAE AMS-QQ-A-200/1 in lieu of QQ-A-357 (CANCELLED), DRAWING 18795.

6. Use Material SAE AMS 5643 in lieu of AMS 5643, DRAWINGS 18832 & 18825.

7. Mark and Identify per notes 2, 3, & 4(DWG. 9927116) in lieu of Z-R701, Code RS, and Z-J901.

8. For large assemblies and components utilize the following statement in lieu of PS 16001) Serial number shall be vibropeened, or steel stamped, in 0.09" letters 0.004"-0.007" deep in the location indicated. If the drawing does not indicate a location, OO-ALC/LGHLEN will provide S/N location instructions. Serialization of item shall be accomplished as follows: The serialization will begin with the CAGE of the contractor named on the contract, followed by a dash and the 2 digit year of manufacture, followed by a dash and a sequentially unique 3 digit number. A contractor who receives numerous intermittent contracts will start serialization of item with the next number in sequence of the prior contract. If a contract produces more than 999 items, the serial number should begin using 4 digit serial numbers. The serial number should appear like this: S/N 98747-01-003."

9. Inspection requirements are as follows:

   A. Perform fluorescent penetrant inspection per ASTM E 1417, Type I, Method B or C, Level 3 or 4 in lieu of MIL-I-6866. This part shall conform to Grade A quality level classification as specified in MIL-STD-1907. The inspector performing the inspection will be Level II certified with the inspection procedure developed by a Level III as specified in NAS-410.

   B. Perform Magnetic Particle inspection per ASTM E 1444, in lieu of MIL-I-6868, fluorescent type, full wave direct current (FWDC), wet continuous method. This part shall conform to classification G rade A quality level classification as specified in MIL-STD-1907. The inspector performing the inspection will be certified to the Level II with the inspection procedure developed by a Level III as specified in NAS-410.

10. After contract award the successful bidder shall provide a copy of the processing documentation (routing documents and process specifications) to LGHLEN for final review before production begins.

11. OO-ALC/LILE system engineering retains all rights to review and accept MRB'S prior to shipment of discrepant items. All deviations, minor and major, from the engineering drawing package will be submitted for MRB disposition.

12. Prior to contract award, the contractor will certify to the government in writing, full compliance with manuals, specifications, and standards called out and required for the manufacture of this contracted landing gear component/assembly. Contractor is responsible to completely search these manuals, specifications, and standards and fully understand the requirements necessary to manufacture landing gear components. Any questions can be forwarded to this office OO-ALC/LILE.

PREPARED BY	SYMBOL	DATE
DAVID H. ARGYLE	LGMPM	20 May 03

REV:	ENGINEERING DATA REQUIREMENTS CONTINUATION SHEET *(ATTACHMENT "A")*

PART NUMBER	NATIONAL STOCK NUMBER
9927116-30	1620-01-467-6214

13. Install Bushings per the following in lieu of F-501.

A. The bushing installations shall be accomplished in such a manner as to avoid damage to the finish on the I.D. of the housing into which the bushing is installed, or the finish of the O.D. of the bushing. Forced installation of sub-zero installations, such as the use of a press or hammer is not permitted, and is not acceptable. A small non-metallic hammer may be used to tap the bushing into alignment with the housing bore, or to seat the bushing.

B. Prior to bushing installation, the parts and housing bore shall be cleaned with a cleaning solvent to remove all contamination.

C. Liquid nitrogen shall be used for all sub-zero installations unless some other sub-zero coolant is specified, and approved by OO-ALC/LILE Engineering. The soak time of the bushing in the liquid nitrogen shall be sufficient to allow the bushing to reach the same temperature as the coolant.

D. The bushing shall be installed into the housing immediately upon removal from the coolant with an absolute minimum of lost time. Trial runs shall be accomplished as necessary to minimize installation time which should be in the order of about seven (7) seconds maximum.

E. It may occasionally be necessary to heat the housing into which the bushing is to be installed, in addition to sub-zero cooling of the bushing. Detail parts in process, which do not have paint or sealant or other organic material applied prior to heating, shall be heated by the use of radiant heat techniques, such as thermal blankets, infrared lamps etc.; to the maximum temperature of 250 F.Temperature measuring devices shall be used to monitor heat and shall be located on areas of the part expected to reach maximum temperature. No scaling oxidation, or corrosion shall be permitted.

F. Bushings without flanges shall be installed into housing bore which has received a light coat of sealant per MIL-PRF-81733. Install shrunken bushing and wipe off any excess sealant that may have extruded aroumd the periphery of both ends of the bushings.

G. Bushings with flanges shall be installed in a similar manner as paragraph (F). Except sealant shall also be applied to face of lug under flange. Sealant shall be applied in such a manner as to ensure complete coverage of inside face of bushing flange when bushing is installed. Wipe off any excess sealant around periphery of bushing flange forming a bead. Wipe any excess sealant from the other end of the bushing also.

H. For bushings with external grease grooves the inside of the lug will be coated with MIL-C-16173 prior to bushing installation, and face of lug will be coated with MIL-PRF-81733 per paragraph G.

PREPARED BY	SYMBOL	DATE
DAVID H. ARGYLE	LGMPM	20 May 03

14. The required forgings will be procured from the qualified forging source using the original certified forging procedures and dies/tooling.

    A. Prior to contract award, the detailed part bidder shall provide certification, from the forging source, to the Government that the certified dies and procedures are available and that the forging source has an agreement with the detail parts bidder to provide forgings for their use in the event they are the successful bidder.

    B. Prior to production, forging lot qualification shall be accomplished as specified on the forging drawing and SAE AMS-A-22771 for aluminum forgings. The detailed part contractor shall assure that this has been accomplished by the forging source and shall submit certified documentation of accomplishment to the Government.

15. FORGING SOURCE, CONTROL AND LOCATION OF DIES:

    A. Forging drawing: 9927116-03
       Die number: 11795.51

    B. Control of forging process: U. S.A.F.

    C. Location of forging dies: Weber Metals Inc.
       6706 South Garfield
       Paramount, California 90723
       (562) 602-0260

16. INSTRUCTIONS FOR QUALIFICATION OF NEW FORGING SOURCE.

    Prior to contract award,the contractor will advise the government in writing of their intent to procure new forging dies and the proposed forging source. The contractor will not proceed to obtain new dies without the express consent of the government procuring agency. The government will have unlimited use of the dies developed under this contract. The contractor will inform the forging house in writing, at the same time the order for the dies is placed, that the government has unlimited use rights of the dies and forward a copy of this letter to the Contracting Officer.

SOURCE QUALIFICATION REQUIREMENTS
(PL98-525, SECTION 2319)

STOCK NR (NSN): 1620-01-467-6214 PART NUMBER (P/N): 9927116-30
NOUN: Shock Strut Assy- Nose Landing Gear AIRCRAFT: A-10

SECTION C

QUALIFICATION REQUIREMENTS THAT MUST BE SATISFIED TO BECOME A QUALIFIED SOURCE:

1. Because of the need for uninterrupted item support to military aircraft systems while keeping with the requirements of PL 98-525, the current acquisition need not and generally will not be delayed to provide an offeror an opportunity to qualify. Normal acquisition practices at OO-ALC should preclude the denial of opportunity to any interested offeror.

2. The offeror must provide a pre-contract award qualification article, which meets the requirements of the engineering drawings, material specifications, and process specifications. However, successful completion of the qualification testing does not guarantee any contract award. If the offeror is deemed qualified and awarded the contract, a post-contract award first article exhibit may be required to verify production capability.

3. The qualification article will be subjected to form, fit, and function verification as well as required testing to assure compliance with data list and other applicable procurement criteria. The qualification article shall demonstrate full compatibility and comparability with existing parts.

4. The required materials will be procured from a qualified source and shall meet the requirements of their respective specifications. The offeror will assure that the supplier has accomplished this and shall submit certified documentation of accomplishment of the above requirements to the purchaser along with the pre-contract award qualification article.

5. The required forgings shall be procured from the qualified forging source using the original certified forging procedures and dies. Forging material and lot qualifications shall be accomplished as required in the specified forging drawing, P/N 9927116 and specification SAE-AMS-A-22771. The offeror shall assure that this is or has been accomplished by the forging source and will submit certified documentation of accomplishment of the above requirements to the government along with the pre-contract award qualification article.

6. The qualification article once submitted will become subject to such testing as deemed necessary by the U.S. Government to prove that the article meets all dimensional, processing and functional requirements. Such testing may result in the destruction of the article. Following completion of necessary testing and evaluation, the article no matter what its condition shall be returned to the contractor or disposed of at his discretion and direction whether it was found acceptable or not.

7. Form verification: The U.S. Government's Quality Verification Center (QVC) will be used to insure compliance with the dimensional requirements of the article. Material and processing compliance will also be verified as required.

8. Fit/function verification: Existing components and government test stands and fixtures will be utilized to verify physical interface and functional performance of articles.

9. Testing for material and process compliance.
   (a) Material analysis
   (b) Heat treat
   (c) Grinding
   (d) Plating
   (e) Finish
   (f) Grain flow
   (g) Other

SOURCE QUALIFICATION REQUIREMENTS
(PL98-525, SECTION 2319)

STOCK NR (NSN): 1620-01-467-6214 PART NUMBER (P/N): 9927116-30
NOUN: Shock Strut Assy- Nose Landing Gear AIRCRAFT: A-10

10. Remarks:

a. Organic verification capabilities exist at OO-ALC.

b. Testing requirements outside organic capabilities will be contracted out.

11. The estimated cost of government testing and evaluation is $3000.

12. Maximum time for testing of the qualification article will not exceed 30 days from receipt at testing agency.

SECTION D

QUALIFICATION WAIVER REQUIREMENTS.

1. An offerer who has had previous experience in the manufacture and qualification of items, which can be correlated with this product, may apply to the design control authority at OO-ALC for a waiver of the above stated qualification requirements.

a. The qualification waiver criteria utilized by the design control authority to perform a qualification analysis are available upon request. The qualification waiver criteria may be used as a guide in preparing the offerer's written input to the design control authority.

b. The burden of proof for written inputs is on the offerer. The design control authority will not pursue authenticity verification of claims made by the offerer of product manufacturing experience with other Government or non-Government agencies. Unsubstantiated claims will not be considered in the waiver analysis process.

c. This waiver will be granted if and only if the design control authority (LGHEL) can establish the qualifications of the offerer through the evaluation of written inputs from the offerer or from previous knowledge of the offerer's capabilities or from previous experience with the offerer on similar item acquisitions. If there is any doubt about the offerer's capability, the offerer will be required to submit a pre-qualification article. There is no guarantee of qualification by similarity. LGHEL reserves the right to require a pre-qualification article of all offerers.

2. The current acquisition need not and will not be delayed in order to provide an offerer with an opportunity to meet the requirements for qualification waiver.

3. Maximum time for approval of qualification by similarity will not exceed 15 days.

REVISION: *03*

ENGINEERING DATA LIST

* HISTORY *

DATE :	DATA TECH :	ORGN SYMBOL :	PR NR :	APPLICATION:	PAGE
27MAR02	SDA	LGMPM		A-10	1 OF 1

CAGE:	MANUFACTURER NAME:	REFERENCE NR:	NOUN :	NSN :
26512	NORTHROP GRUMMAN CORP	18805-1	PISTON TUBE,LANDING	1620010121969

CAGE	DRAWING NUMBER	REV	NR SHEETS	NR CARDS	FURN CODE	DIST CODE	NOUN	REQUIREMENTS
77751	18805 /	G	0001	0000	S		PISTON TUBE SHOCK STRUT N.L.G.	

STANDARD ENGINEERING TEXT

ENGINEERING DATA LIST REMARKS

FURNISHED METHOD CODE LEGEND:

C - CLASSIFIED DOCUMENT.
S - FURNISHED WITH SOLICITATION.
M - STABLE BASE DRAWING REQUIRED; FURNISHED WITH CONTRACT AWARD

X - DATA SUPPLIED (NOT IN EDCARS).
R - FURNISHED BY PCD UPON REQUEST.
P - PARTIAL DOCUMENT FURNISHED.
V - VENDOR DRAWING;

G - GOV'T DOCUMENT.
O - OTHERS, CONTRACTOR MUST ACQUIRE.
A - DATA NOT

REV: OO-ALC	**ENGINEERING DATA REQUIREMENTS** *(ATTACHMENT "A")*

NOTE: MILITARY SPECIFICATIONS I/STANDARDS WILL NOT BE FURNISHED IN THE BID SET.

1. THE FOLLOWING INSTRUCTIONS ARE FURNISHED FOR THE MANUFACTURE OF

PISTON TUBE SHOCK STRUT (NOSE LANDING GEAR) A-10

2. PART NUMBER	3. NATIONAL STOCK NUMBER
18805-1	1620-01-012-1969

4. THE FOLLOWING SPECIFICATIONS/STANDARDS, ETC., WILL BE USED IN LIEU OF THE DATA INDICATED. THE SUPERSEDED DATA WILL NOT BE FURNISHED UNLESS SO INDICATED.

5. Use Material SAE AMS 6257 in lieu of MIL-S-8844 (CANCELLED).

6. Grind per MIL-STD-866 and nital etch for burns per MIL-STD-867 in lieu of F-F101.

7. Heat Treat per SAE AMS-H-6875 in lieu of MIL-H-6875.

8. Shot Peen per SAE AMS-S-13165 in lieu of MIL-S-13165.

9. Inspection requirements are as follows:

   A. Perform Magnetic particle inspection per ASTM E1444 in lieu of MIL-I-6868. Use full wave direct current (FWDC), wet continuous method, fluorescent type with the following acceptance/rejection criteria: NO DEFECTS ALLOWED. The intent of NO DEFECTS ALLOWED is that the inspection is conducted at the required sensitivity level and there shall be no indications allowed. The inspector performing the inspection shall be certified to Level II with the inspection procedure developed by a Level III as specified in NAS-410.

10. Chrome Plate per MIL-STD-1501 (Class 2,Type 1) in lieu of SAE AMS-QQ-C-320.

11. Protect unplated surfaces, using temporary coatings as required to prevent damage or deterioration during handling, per MIL-C-16173 in lieu of R-Z901, CODE ZZ.

12. Identification and Marking per MIL-STD-130 in lieu of Z-R701.

13. Serialization of items shall be accomplised as follows:

   A. "Serial number shall be vibropeened in 0.09" letters,.004 to .007" deep in the location indicated.If the drawing does not indicate a location, LILE will provide S/N location instructions. Serialization of item shall be accomplished as follows: The serialization will begin with the letters "S/N" followed by the CAGE of the contractor named on the contract, followed by a dash and the 2 digit year of manufacture, followed by a dash and a sequentially unique 3 digit number. A contractor who receives numerous intermittent contracts will start serialization of item with the next number in sequence of the prior contract. If a contract produces more than 999 items, the serial number should begin using 4 digit serial numbers. The serial number should appear like this: S/N 98747-02-001."

14. After contract award the successful bidder shall provide a copy of the processing documentation (routing documents and process specifications) to LILE for final review before production begins.

PREPARED BY	SYMBOL	DATE
DAVID H. ARGYLE	LGMPM	3 May 02

REV:	ENGINEERING DATA REQUIREMENTS CONTINUATION SHEET *(ATTACHMENT "A")*

PART NUMBER	NATIONAL STOCK NUMBER
18805-1	1620-01-012-1969

15. OO-ALC/LILE system engineering retains all rights to review and accept MRB'S prior to shipment of discrepant items. All deviations, minor and major, from the engineering drawing package will be submitted for MRB disposition.

16. Prior to contract award, the contractor will certify to the government in writing, full compliance with manuals, specifications, and standards called out and required for the manufacture of this contracted landing gear component/assembly. Contractor is responsible to completely search these manuals, specifications, and standards and fully understand the requirements necessary to manufacture landing gear components. Any questions can be forwarded to this office, OO-ALC/LILE.

PREPARED BY	SYMBOL	DATE
DAVID H. ARGYLE	LGMPM	3 May 02

SOURCE QUALIFICATION REQUIREMENTS
(PL 98-525, SECTION 2319)

STOCK NR (NSN) 1620-01-012-1969 PART NUMBER (P/N) 18805-1
NOUN: Piston tube AIRCRAFT: A-10 NLG

SECTION C

QUALIFICATION REQUIREMENTS THAT MUST BE SATISFIED TO BECOME A QUALIFIED SOURCE

1. Because of the need for uninterrupted item support to military aircraft systems and in keeping with the requirements of PL 98-525, the current acquisition need not and generally will not be delayed to provide an offerer an opportunity to qualify. Normal acquisition practices at OO-ALC should preclude the denial of opportunity to any interested offerer.

2. The offerer must provide a pre-contract award qualification article, which meets the requirements of the engineering drawings, material specifications, and process specifications. However, successful completion of the qualification testing does not guarantee any contract award. If the offeror is deemed qualified and awarded the contract, a post-contract award first ariticle exhibit may be required to verify production capability.

3. The required materials will be procured from a qualified source and will meet the requirements of their respective specifications. The offerer will assure that the material supplier has accomplished this and will submit certified documentation of accomplishment of the above requirements to the purchaser along with the pre-contract award qualification article.

4. The qualification article shall demonstrate full compatibility and comparability with existing parts, and once submitted, will be subjected to such testing as deemed necessary by the government, to insure the article meets all dimensional, processing, and functional requirements. Such testing may result in the destruction of the article. Following completion of necessary testing and evaluation, the article, no matter what its condition, shall be returned to the contractor or disposed of at his discretion and direction, whether it was found acceptable or not.

5. Form verification: The Government's Quality Verification Center will verify compliance with dimensional data requirements. Material and process compliance will also be verified as required.

6. Fit/function verification: Existing components and Government test stands/fixtures will be utilized to verify physical interface and functional performance of articles.

7. Testing for material and process compliance

(a) Material analysis
(b) Heat treat
(c) Grinding
(d) Plating
(e) Finish
(f) Other

8. Remarks:

a. Organic verification capabilities exist at OO-ALC.

b. Test requirements outside organic capabilities will be contracted out to independent laboratories.

9. The estimated cost of government testing and evaluation is $2000

10. Maximum time for testing of the qualification article will not exceed 30 days from receipt at testing agency.

SOURCE QUALIFICATION REQUIREMENTS
(PL 98-525, SECTION 2319)

STOCK NR (NSN) 1620-01-012-1969
NOUN: Piston tube

PART NUMBER (P/N) 18805-1
AIRCRAFT: A-10 NLG

SECTION D

QUALIFICATION WAIVER REQUIREMENTS.

1. An offerer who has had previous experience in the manufacture and qualification of items, which can be correlated with this product, may apply to the design control authority at OO-ALC for a waiver of the above stated qualification requirements.

a. The qualification waiver criteria utilized by the design control authority to perform a qualification analysis are available upon request. The qualification waiver criteria may be used as a guide in preparing the offerer's written input to the design control authority.

b. The burden of proof for written inputs is on the offerer. The design control authority will not pursue authenticity verification of claims made by the offerer of product manufacturing experience with other Government or non-Government agencies. Unsubstantiated claims will not be considered in the waiver analysis process.

c. This waiver will be granted if and only if the design control authority (LILE) can establish the qualifications of the offerer through the evaluation of written inputs from the offerer or from previous knowledge of the offerer's capabilities or from previous experience with the offerer on similar item acquisitions. If there is any doubt about the offerer's capability, the offerer will be required to submit a pre-qualification article. There is no guarantee of qualification by similarity. LILE reserves the right to require a pre-qualification article of all offerers.

2. The current acquisition need not and will not be delayed in order to provide an offerer with an opportunity to meet the requirements for qualification waiver.

3. Maximum time for approval of qualification by similarity will not exceed 15 days.

REVISION: 06

ENGINEERING DATA LIST

* HISTORY *

DATE : 16MAY02	DATA TECH : SDB	ORGN SYMBOL : LGMPM	PR NR :	APPLICATION: F15	PAGE 1 OF 1

CAGE: 76301	MANUFACTURER NAME: BOEING CO/MC DONNELL ACFT	REFERENCE NR: 68A450602-1001	NOUN : CYLINDER,LANDING GE	NSN : 1620003109830

CAGE	DRAWING NUMBER	REV	NR SHEETS	NR CARDS	FURN CODE	DIST CODE	NOUN	REQUIREMENTS
76301	MMS1304 /		0000	0000	S		MATERIAL SPECIFICATION	DATA AVAILABLE AT WR-ALC.
76301	PS20018 /		0000	0000	S		SURFACE FINISH OF HOLES	DATA AVAILABLE AT WR-ALC.
76301	PS23007 /		0000	0000	S		PROCESS SPECIFICATION	DATA AVAILABLE AT WR-ALC
76301	PS23041 /		0000	0000	S		BREAK SHARP EDGES	DATA AVAILABLE AT WR-ALC.
76301	ST4M130 /		0000	0000	S		BUSHING	DATA AVAILABLE AT WR-ALC.
76301	4M139 /		0000	0000	S		BUSHING	DATA AVAILABLE AT WR-ALC.
76301	68A450602 W/PL /	J	0004	0000	S		CYLINDER ASSEMBLY, NLG	DATA AVAILABLE AT WR-ALC.
76301	68A450631 W/PL /	C	0000	0000	S		BUSHING, TRUNNION, NLG	DATA AVAILABLE AT WR-ALC.
	/A80342							EO

STANDARD ENGINEERING TEXT

ENGINEERING DATA LIST REMARKS

FURNISHED METHOD CODE LEGEND:

C - CLASSIFIED DOCUMENT.
S - FURNISHED WITH SOLICITATION.
M - STABLE BASE DRAWING REQUIRED; FURNISHED WITH CONTRACT [illegible]

X - DATA SUPPLIED (NOT IN EDCARS).
R - FURNISHED BY PCD UPON REQUEST.
P - PARTIAL DOCUMENT FURNISHED.
V - VENDOR DRAWING;

G - GOV'T DOCUMENT.
O - OTHERS, CONTRACTOR MUST ACQUIRE.
A - DATA NOT

REV:	ENGINEERING DATA REQUIREMENTS (ATTACHMENT "A")

NOTE: MILITARY SPECIFICATIONS I/STANDARDS WILL NOT BE FURNISHED IN THE BID SET.

1. THE FOLLOWING INSTRUCTIONS ARE FURNISHED FOR THE MANUFACTURE OF

CYLINDER ASSEMBLY

2. PART NUMBER	3. NATIONAL STOCK NUMBER
68A450602-1001	1620-00-310-9830

4. THE FOLLOWING SPECIFICATIONS/STANDARDS, ETC., WILL BE USED IN LIEU OF THE DATA INDICATED. THE SUPERSEDED DATA WILL NOT BE FURNISHED UNLESS SO INDICATED.

5. OO-ALC/LILE SYSTEM ENGINEERING RETAINS ALL RIGHTS TO REVIEW AND ACCEPT/REJECT MATERIAL REVIEW BOARD (MRB) DISPOSITIONS PRIOR TO SHIPMENT OF DISCREPANT ITEM. ALL DEVIATIONS, MINOR AND MAJOR, FROM THE ENGINEERING DRAWING PACKAGE SHALL BE SUBMITTED FOR MRB DISPOSITION.

6. PRIOR TO CONTRACT AWARD, THE CONTRACTOR SHALL CERTIFY TO THE GOVERNMENT IN WRITING FULL COMPLIANCE WITH MANUALS, SPECIFICATIONS, AND STANDARDS CALLED OUT AND REQUIRED FOR THE MANUFACTURE OF THIS CONTRACTED LANDING GEAR COMPONENT/ASSEMBLY. CONTRACTOR IS RESPONSIBLE TO COMPLETELY SEARCH THESE MANUALS, SPECIFICATIONS, AND STANDARDS AND FULLY UNDERSTAND THE REQUIREMENTS NECESSARY TO MANUFACTURE LANDING GEAR COMPONENTS. ANY QUESTIONS CAN BE FORWARDED TO THE OFFICE OF OO-ALC/LILE.

7. AFTER CONTRACT AWARD, THE SUCCESSFUL BIDDER SHALL PROVIDE A COPY OF THE PROCESSING DOCUMENTATION (ROUTING DOCUMENTS AND PROCESS SPECIFICATIONS) TO LILE FOR FINAL REVIEW BEFORE PRODUCTION BEGINS.

8. IDENTIFICATION AND MARKING PER MIL-STD-130 AS AN ALTERNATE TO PS 16001.

9. SERIALIZATION OF ITEM SHALL BE ACCOMPLISHED AS FOLLOWS: SERIAL NUMBER SHALL BE VIBROPEENED (WITH VIBRATING PNEUMATIC PENCIL), IN 0.09" LETTERS 0.004"-0.007" DEEP IN THE LOCATION INDICATED. IF THE DRAWING DOES NOT INDICATE A LOCATION, OO-ALC/LILE SHALL PROVIDE S/N LOCATION INSTRUCTIONS. SERIALIZATION OF ITEM SHALL BE ACCOMPLISHED AS FOLLOWS: THE SERIALIZATION SHALL BEGIN WITH THE CAGE (FSCM) OF THE CONTRACTOR NAMED ON THE CONTRACT, FOLLOWED BY A DASH AND THE 2 DIGIT YEAR OF MANUFACTURE, FOLLOWED BY A DASH AND A SEQUENTIALLY UNIQUE 3 DIGIT NUMBER. A CONTRACTOR WHO RECEIVES NUMEROUS INTERMITTENT CONTRACTS SHALL START SERIALIZATION OF ITEM WITH THE NEXT NUMBER IN SEQUENCE OF THE PRIOR CONTRACT. IF A CONTRACT PRODUCES MORE THAN 999 ITEMS, THE SERIAL NUMBER SHOULD BEGIN USING 4 DIGIT SERIAL NUMBERS. THE SERIAL NUMBER SHOULD APPEAR LIKE THIS: "S/N 98747-02-001.

10. DIMENSIONS AND TOLERANCES PER ASME Y14.5 IN LIEU OF USASI Y14.5 AND ANSI Y14.5.

11. THREADS PER MIL-S-8879 (SAFETY CRITICAL).

12. PERFORM FLUORESCENT PENERTRANT INSPECTION PER ASTM E 1417, TYPE I, METHOD B OR C, LEVEL 3 OR 4 IN LIEU OF PS21202 WITH THE FOLLOWING ACCEPTANCE/REJECTION CRITERIA: NO DEFECTS ALLOWED. THE INTENT OF NO DEFECTS ALLOWED IS THAT THE INSPECTION IS CONDUCTED AT THE REQUIRED SENSITIVITY LEVEL AND THERE SHALL BE NO INDICATIONS ALLOWED. THE INSPECTOR PERFORMING THE INSPECTION SHALL BE VERTIFIED TO LEVEL II WITH THE INSPECTION PROCEDURE DEVELOPED BY A LEVEL III AS SPECIFIED IN NAS-410.

PREPARED BY	SYMBOL	DATE
DENISE S. BISHOP	LGMPM	5 Jun 02

REV:	ENGINEERING DATA REQUIREMENTS CONTINUATION SHEET *(ATTACHMENT "A")*

PART NUMBER	NATIONAL STOCK NUMBER
68A450602-1001	1620-00-310-9830

13. ULTRASONIC INSPECTION PER MIL-STD-2154 IN LIEU OF MIL-I-8950.

14. MATERIAL: CRES 17-4PH PER SAE AMS 5643 IN LIEU OF AMS 5643. (DWG 68A450631)

15. SHOT PEEN PER SAE AMS-S-13165 MAY BE USED AS AN ALTERNATE TO PS 14023.

16. HEAT TREAT PER SAE AMS-H-6875 AS AN ALTERNATE TO PS 15227.

17. PASSIVATE PER SAE AMS-QQ-P-35 OR ASTM A967 MAY BE USED AS AN ALTERNATE TO PS13001.

18. ANODIZE PER MIL-A-8625, TYPE II, CLASS I MAY BE USED AS AN ALTERNATE TO PS 13201.

19. HARD COAT PER MIL-A-8625, TYPE III, CLASS 2 ("BLACK #37038") MAY BE USED AS AN ALTERNATE TO PS 13208.

20. APPLY ONE COAT EPOXY WATERBORNE PRIMER PER MIL-PRF-85582, TYPE I, CLASS 2. ALTERNATE ONE COAT OF EPOXY POLYAMIDE PRIMER PER MIL-PRF-23377, TYPE I. APPLY TWO TOPCOATS POLYURETHANE PER MIL-PRF-85285, TYPE I, COLOR NUMBER 17925 (WHITE) PER FED-STD-595 IN LIEU OF NOTE 22, (DRAWING PL68450602), MIL-P-23377B, MMS420 AND PS 13646.

21. INSTALL BUSHINGS PER THE FOLLOWING AS AN ALTERNATE TO PS17034:

A. THE BUSHING INSTALLATIONS SHALL BE ACCOMPLISHED IN SUCH A MANNER AS TO AVOID DAMAGE TO THE FINISH ON THE I.D. OF THE HOUSING INTO WHICH THE BUSHING IS INSTALLED, OR THE FINISH OF THE O.D. OF THE BUSHING. FORCED INSTALLATION OF SUB-ZERO INSTALLATIONS, SUCH AS THE USE OF A PRESS OR HAMMER IS NOT PERMITTED, AND IS NOT ACCEPTABLE. A SMALL NON-METALLIC HAMMER MAY BE USED TO TAP THE BUSHING INTO ALIGNMENT WITH THE HOUSING BORE, OR TO SEAT THE BUSHING.

B. PRIOR TO BUSHING INSTALLATION, THE PARTS AND HOUSING BORE SHALL BE CLEANED WITH CLEANING SOLVENT TO REMOVE ALL CONTAMINATION.

C. LIQUID NITROGEN SHALL BE USED FOR ALL SUB-ZERO INSTALLATIONS UNLESS SOME OTHER SUB-ZERO COOLANT IS SPECIFIED, AND APPROVED BY OO-ALC/LILEC ENGINEERING. THE SOAK TIME OF THE BUSHING IN THE LIQUID NITROGEN SHALL BE SUFFICIENT TO ALLOW THE BUSHING TO REACH THE SAME TEMPERATURE AS THE COOLANT.

D. THE BUSHING SHALL BE INSTALLED INTO THE HOUSING IMMEDIATELY UPON REMOVAL FROM THE COOLANT WITH AN ABSOLUTE MINIMUM OF LOST TIME. TRIAL RUNS SHALL BE ACCOMPLISHED AS NECESSARY TO MINIMIZE INSTALLATION TIME WHICH SHOULD BE IN THE ORDER OF ABOUT SEVEN (7) SECONDS MAXIMUM.

PREPARED BY	SYMBOL	DATE
DENISE S. BISHOP	LGMPM	5 Jun 02

REV:	ENGINEERING DATA REQUIREMENTS CONTINUATION SHEET *(ATTACHMENT "A")*

PART NUMBER	NATIONAL STOCK NUMBER
68A450602-1001	1620-00-310-9830

E. IT MAY OCCASIONALLY BE NECESSARY TO HEAT THE HOUSING INTO WHICH THE BUSHING IS TO BE INSTALLED, IN ADDITION TO SUB-ZERO COOLING OF THE BUSHING. DETAIL PARTS IN PROCESS, WHICH DO NOT HAVE PAINT OR SEALANT OR OTHER ORGANIC MATERIAL APPLIED PRIOR TO HEATING, THE PARTS SHALL BE HEATED BY THE USE OF RADIANT HEAT TECHNIQUES, SUCH AS THERMAL BLANKETS, INFRARED LAMPS ETC.; TO THE MAXIMUM TEMPERATURE OF 250 F. THE TEMPERATURE MEASURING DEVICES SHALL BE USED TO MONITOR HEAT AND SHALL BE LOCATED ON AREAS OF THE PART EXPECTED TO REACH MAXIMUM TEMPERATURE. NO SCALING, OXIDATION, OR CORROSION SHALL BE PERMITTED.

F. BUSHINGS WITHOUT FLANGES SHALL BE INSTALLED INTO HOUSING BORE WHICH HAS RECEIVED A LIGHT COAT OF SEALANT PER MIL-S-81733. INSTALL SHRUNKEN BUSHING AND WIPE OFF ANY EXCESS SEALANT THAT MAY HAVE EXTRUDED AROUND THE PERIPHERY OF BOTH ENDS OF THE BUSHINGS.

G. BUSHINGS WITH FLANGES SHALL BE INSTALLED IN A SIMILAR MANNER AS PARAGRAPH (F) EXCEPT SEALANT SHALL ALSO BE APPLIED TO FACE OR LUG UNDER FLANGE. SEALANT SHALL BE APPLIED IN SUCH A MANNER AS TO ENSURE COMPLETE COVERAGE OF INSIDE FACE OF BUSHING FLANGE WHEN BUSHING IS INSTALLED. WIPE OFF ANY EXCESS SEALANT AROUND PERIPHERY OF BUSHING FLANGE FORMING A BEAD. WIPE ANY EXCESS SEALANT FROM OTHER END OF BUSHING ALSO.

H. FOR BUSHINGS WITH EXTERNAL GREASE GROOVES THE INSIDE OF THE LUG WILL BE COATED WITH MIL-C-16173 PRIOR TO BUSHING INSTALLATION AND FACE OF LUG WILL BE COATED WITH MIL-S-81733 PER PARAGRAPH G.

22. FOR DRAWING CLARIFICATION THE FOLLOWING APPLIES:

A. THE .625 INCH LUG LENGTH SHOULD BE A (TYPICAL) ALSO APPLYING TO THE MATING LUG (SHEET 1, ZONE C9).

23. USE MIL-STD-1537 AS AN ALTERNATE TO MMS-141.

24. THE FOLLOWING DRAWINGS ARE NOT REQUIRED FOR MANUFACTURE OF THIS ITEM: 40M114, 40M129, 40M114, CPC850A100 AND FINISH SPECIFICATION 68A900000.

25. FORGING REQUIREMENTS:

A. THE FORGING SHALL BE PROCURED FROM THE ORIGINAL FORGING SOURCE, USING THE ORIGINAL CERTIFIED FORGING PROCEDURES AND DIES/TOOLING.

1. PRIOR TO CONTRACT AWARD, THE DETAILED PART BIDDER SHALL PROVIDE CERTIFICATION, FROM THE FORGING SOURCE, TO THE GOVERNMENT THAT THE CERTIFIED DIES AND PROCEDURES ARE AVAILABLE AND THE FORGING SOURCE HAS AN AGREEMENT WITH THE DETAIL PARTS BIDDER TO PROVIDE FORGINGS FOR THEIR USE IN THE EVENT THEY ARE THE SUCCESSFUL BIDDER.

PREPARED BY	SYMBOL	DATE
DENISE S. BISHOP	LGMPM	5 Jun 02

REV:	ENGINEERING DATA REQUIREMENTS CONTINUATION SHEET *(ATTACHMENT "A")*

PART NUMBER	NATIONAL STOCK NUMBER
68A450602-1001	1620-00-310-9830

2. PRIOR TO PRODUCTION, FORGING LOT QUALIFICATION SHALL BE ACCOMPLISHED AS SPECIFIED ON THE FORGING DRAWING AND SAE AMS-F-7190 FOR STEEL FORGINGS AND SAE AMS-A-22771 FOR ALUMINUM FORGINGS. THE DETAILED PART CONTRACTOR SHALL ASSURE THAT THIS HAS BEEN ACCOMPLISHED BY THE FORGING SOURCE AND SHALL SUBMIT CERTIFIED DOCUMENTATION OF ACCOMPLISHMENT TO THE GOVERNMENT.

B. FORGING SOURCE, CONTROL AND LOCATION:

1. FORGING DRAWING: 68A450602-2001

2. CONTROL OF FORGING PROCESS: MCDONNELL

3. LOCATION OF FORGING DIES: WEBER METALS
16706 S. GARFIELD
PARAMOUNT, CA 90723
PHONE: (562) 602-0260

4. DIE NUMBER 11445.31

26. PRIOR TO CONTRACT AWARD, THE CONTRACTOR SHALL ADVISE THE GOVERNMENT IN WRITING OF THE INTENT TO PROCURE NEW FORGING DIES AND THE PROPOSED FORGING SOURCE. THE CONTRACTOR SHALL NOT PROCEED TO OBTAIN NEW FORGING DIES WITHOUT THE EXPRESS WRITTEN CONSENT OF THE GOVERNMENT-PROCURING ACTIVITY. THE GOVERNMENT SHALL HAVE UNLIMITED USE OF THE DIES DEVELOPED UNDER THIS CONTRACT. THE CONTRACTOR SHALL INFORM THE FORGING HOUSE IN WRITING, AT THE SAME TIME OF THE ORDER FOR THE DIES IS PLACED, THAT THE GOVERNMENT HAS UNLIMITED USE RIGHTS OF THE DIES AND FORWARD A COPY OF THIS LETTER TO THE GOVERNMENT CONTRACTING OFFICER.

PREPARED BY	SYMBOL	DATE
DENISE S. BISHOP	LGMPM	5 Jun 02

SOURCE QUALIFICATION REQUIREMENTS
(PL98-525, SECTION 2319)

STOCK NR (NSN)1620-00-310-9830 PART NUMBER (P/N)68A450602-1001
NOUN: Cylinder Assembly, Nose Landing Gear AIRCRAFT:F-15

SECTION C

QUALIFICATION REQUIREMENTS THAT MUST BE SATISFIED TO BECOME A QUALIFIED SOURCE:

1. Because of the need for uninterrupted item support to military aircraft systems while keeping with the requirements of PL 98-525, the current acquisition need not and generally will not be delayed to provide an offeror an opportunity to qualify. Normal acquisition practices at OO-ALC should preclude the denial of opportunity to any interested offeror.

2. The offeror must provide a pre-contract award qualification article, which meets the requirements of the engineering drawings, material specifications, and process specifications. However, successful completion of the qualification testing does not guarantee any contract award. If the offeror is deemed qualified and awarded the contract, a post-contract award first ariticle exhibit may be required to verify production capability.

3. The qualification article will be subjected to form, fit, and function verification as well as required testing to assure compliance with data list and other applicable procurement criteria. The qualification article shall demonstrate full compatibility and comparability with existing parts.

4. The required materials will be procured from a qualified source and shall meet the requirements of their respective specifications. The offeror will assure that the supplier has accomplished this and shall submit certified documentation of accomplishment of the above requirements to the purchaser along with the pre-contract award qualification article.

5. The required forgings shall be procured from the qualified forging source using the original certified forging procedures and dies. Forging material and lot qualifications shall be accomplished as required in the specified forging drawing, P/N 68A450602-2001 and specification MIL-A-22771. The offeror shall assure that this is or has been accomplished by the forging source and will submit certified documentation of accomplishment of the above requirements to the government along with the pre-contract award qualification article.

6. The qualification article once submitted will become subject to such testing as deemed necessary by the U.S. Government to prove that the article meets all dimensional, processing and functional requirements. Such testing may result in the destruction of the article. Following completion of necessary testing and evaluation, the article no matter what its condition shall be returned to the contractor or disposed of at his discretion and direction whether it was found acceptable or not.

7. Form verification: The U.S. Government's Quality Verification Center (QVC) will be used to insure compliance with the dimensional requirements of the article. Material and processing compliance will also be verified as required.

8. Fit/function verification: Existing components and government test stands and fixtures will be utilized to verify physical interface and functional performance of articles.

9. Testing for material and process compliance.
   (a) Material analysis
   (b) Heat treat
   (c) Grinding
   (d) Plating
   (e) Finish
   (f) Grain flow
   (g) Other

SOURCE QUALIFICATION REQUIREMENTS
(PL98-525, SECTION 2319)

STOCK NR (NSN)1620-00-310-9830 PART NUMBER (P/N)68A450602-1001
NOUN: Cylinder Assembly, Nose Landing Gear AIRCRAFT:F-15

10. Remarks:

a. Organic verification capabilities exist at OO-ALC.

b. Testing requirements outside organic capabilities will be contracted out.

11. The estimated cost of government testing and evaluation is $3000.

12. Maximum time for testing of the qualification article will not exceed 30 days from receipt at testing agency.

SECTION D

QUALIFICATION WAIVER REQUIREMENTS.

1. An offerer who has had previous experience in the manufacture and qualification of items, which can be correlated with this product, may apply to the design control authority at OO-ALC for a waiver of the above stated qualification requirements.

a. The qualification waiver criteria utilized by the design control authority to perform a qualification analysis are available upon request. The qualification waiver criteria may be used as a guide in preparing the offerer's written input to the design control authority.

b. The burden of proof for written inputs is on the offerer. The design control authority will not pursue authenticity verification of claims made by the offerer of product manufacturing experience with other Government or non-Government agencies. Unsubstantiated claims will not be considered in the waiver analysis process.

c. This waiver will be granted if and only if the design control authority (LILE) can establish the qualifications of the offerer through the evaluation of written inputs from the offerer or from previous knowledge of the offerer's capabilities or from previous experience with the offerer on similar item acquisitions. If there is any doubt about the offerer's capability, the offerer will be required to submit a pre-qualification article. There is no guarantee of qualification by similarity. LILE reserves the right to require a pre-qualification article of all offerers.

2. The current acquisition need not and will not be delayed in order to provide an offerer with an opportunity to meet the requirements for qualification waiver.

3. Maximum time for approval of qualification by similarity will not exceed 15 days.

REVISION: 02

ENGINEERING DATA LIST

* HISTORY *

DATE :	DATA TECH :	ORGN SYMBOL :	PR NR :	APPLICATION:	PAGE
24JUN03	SDA	LGMPM		F15 ACFT	1 OF 1

CAGE:	MANUFACTURER NAME:	REFERENCE NR:	NOUN :	NSN :
76301	BOEING CO/MC DONNELL ACFT	68A410702-1006	CYLINDER,LANDING GE	1620010753562

CAGE	DRAWING NUMBER	REV	NR SHEETS	NR CARDS	FURN CODE	DIST CODE	NOUN	REQUIREMENTS
98747	OO-ALC/LGMPM /	A	0004	0000	S		ENG. DATA RQMNTS.(ATTACH."A")	
76301	PS 15063 /	H	0009	0000	S		PROCESS SPECIFICATION	OBTAIN DATA FROM WR-ALC(JEDMICS)
76301	PS 20018 /	E	0005	0000	S		PROCESS SPECIFICATION	OBTAIN DATA FROM WR-ALC(JEDMICS)
76301	PS 23041 /	R	0023	0000	S		PROCESS SPECIFICATION	OBTAIN DATA FROM WR-ALC(JEDMICS)
76301	ST4M130 /	AU	0000	0000	S		BUSHING,SLEEVE-FLANGE SPECIAL	OBTAIN DATA FROM WR-ALC(JEDMICS)
76301	68A410602 WITH P/L /	D	0003	0000	S		CYLINDER ASSY.-M.L.G. FORGING	OBTAIN DATA FROM WR-ALC(JEDMICS)
76301	68A410670 WITH P/L /		0001	0000	S		BUSHING,OTR.CYLNDR. LUG-M.L.G.	OBTAIN DATA FROM WR-ALC(JEDMICS)
76301	68A410702 WITH P/L /	G	0003	0000	S		CYLINDER ASSEMBLY-MAIN LND.GEAR	OBTAIN DATA FROM WR-ALC(JEDMICS)
76301	68A410720 WITH P/L /	B	0001	0000	S		BUSHING TRUNNION PIN-M.L.G.	OBTAIN DATA FROM WR-ALC(JEDMICS)

STANDARD ENGINEERING TEXT

ENGINEERING DATA LIST REMARKS

FURNISHED METHOD CODE LEGEND:

C - CLASSIFIED DOCUMENT.
S - FURNISHED WITH SOLICITATION.
M - STABLE BASE DRAWING REQUIRED; FURNISHED WITH CONTRACT AWARD.
X - DATA SUPPLIED (NOT IN EDCARS).
R - FURNISHED BY PCD UPON REQUEST.
P - PARTIAL DOCUMENT FURNISHED.
V - VENDOR DRAWING; (NOT PROVIDED).
G - GOV'T DOCUMENT.
O - OTHERS, CONTRACTOR MUST ACQUIRE.
A - DATA NOT AVAILABLE.

REV: A	ENGINEERING DATA REQUIREMENTS (ATTACHMENT "A")

NOTE: MILITARY SPECIFICATIONS I/STANDARDS WILL NOT BE FURNISHED IN THE BID SET.

1. THE FOLLOWING INSTRUCTIONS ARE FURNISHED FOR THE MANUFACTURE OF

CYLINDER ASSEMBLY-MAIN LANDING GEAR

2. PART NUMBER	3. NATIONAL STOCK NUMBER
68A410702-1006	1620-01-075-3562

4. THE FOLLOWING SPECIFICATIONS/STANDARDS, ETC., WILL BE USED IN LIEU OF THE DATA INDICATED. THE SUPERSEDED DATA WILL NOT BE FURNISHED UNLESS SO INDICATED.

5. Use Material SAE AMS 6419 in lieu of AMS 6419, (Drawing 68A410602).

6. Use Material SAE AMS 5629 in lieu of AMS 5629, (Drawing 68A410670).

7. Use Material SAE AMS 4640 in lieu of AMS 4640. Alternate Material use SAE AMS 4590 in lieu of AMS 4590. (Drawing 68A410720).

8. Use Material ASTM B196 in lieu of QQ-C-530, (Drawing 68A410720, Note 15).

9. Inspection requirements are as follows:

   A. Perform fluorescent penetrant inspection in lieu of PS 21202, per ASTM E1417, Type 1, Method B or C. Level 3 or 4 with the following acceptance/rejection criteria: NO DEFECTS ALLOWED. The intent of "NO DEFECTS ALLOWED" is that the inspection is conducted at the required sensitivity level and there will be no indications allowed. The inspector performing the inspection will be certified to Level II with the inspection procedures developed by a Level III as specified in NAS 410.

   B. Perform Magnetic particle inspection per ASTM E1444, in lieu of PS 21201. Use full wave direct current (FWDC), wet continuous method, flouorescent type with the following acceptance/rejection criteria: NO DEFECTS ALLOWED. The intent of "NO DEFECTS ALLOWED" is that the inspection is conducted at the required sensitivity level and there will be no indications allowed. The inspector performing the inspection will be certified to Level II with the inspection procedures developed by a Level III as specified in NAS 410.

10. Mark & Identify per MIL-STD-130, as an alternate to PS 16001 per drawing requirements.

11. Serialization of item shall be accomplished as follows:

   A. Serial number shall be vibropeened, or steel stamped, in 0.09" letters 0.004"-0.007" deep in the location indicated. If the drawing does not indicate a location, OO-ALC/LILE will provide S/N location instructions. Serialization of item shall be accomplished as follows: The serialization will begin with the CAGE of the contractor named on the contract, followed by a dash and the 2 digit year of manufacture, followed by a dash and a sequentially unique 3 digit number. A contractor who receives numerous intermittent contracts will start serialization of item with the next number in sequence of the prior contract. If a contract produces more than 999 items, the serial number should begin using 4 digit serial numbers. The serial number should appear like this: S/N 98747-95-001."

PREPARED BY	SYMBOL	DATE
DAVID H. ARGYLE	LGMPM	13 Mar 03

REV: A	ENGINEERING DATA REQUIREMENTS CONTINUATION SHEET *(ATTACHMENT "A")*
PART NUMBER 68A410702-1006	NATIONAL STOCK NUMBER 1620-01-075-3562

12. Heat Treat per SAE AMS-H-6875 as an alternate to PS 15296. Drawing 68A410702(Note 14) and Drawing 68A410602 (Note 16).

13. Heat Treat per SAE AMS-H-6875 as an alternate to PS 15238, Drawing 68A410670(Note 6).

14. Heat Treat per SAE AMS-H-7199 as an alternate to PS 15935, Drawing 68A410720(Note 15).

15. Temper Etch Inspect per MIL-STD-867 as an alternate to PS 21205 & PS 23006. Drawing 68A410702(Note 17), Drawing 68A410602 (Note 19), and (Note XI, Forging Notes).

16. Shot Peen per SAE AMS-S-13165 as an alternate to PS 14023. Drawing 68A410702(Note 23) and Drawing 68A410602 (Note 23).

17. Passivate per SAE AMS-QQ-P-35, ASTM A967(Type 5) as an alterenate to PS 13001. Drawing 68A410670(Note 9).

18. Forging Cleanliness per SAE AMS 2300 in lieu of AMS 2300. Drawing 68A410602 (Note 10).

19. Chromium Plate per MIL-STD-1501(Type II, Class 3) as an alternate to PS 13102. Drawing 68A410702(Notes 26 & 28) and Drawing 68A410602(Notes 26 & 28).

20. Low Embrittlement Cadmium Plate per MIL-STD-870 (Type II, Class 1) as an alternate to PS 13144. Drawing 68A410702, NOTE 19.

21. Low Embrittlement Cadmium Plate per MIL-STD-870 (Type I, Class 2) as an alternate to PS 13144. Drawing 68AA410602, NOTE 35.

22. Finish Specification 68A900000 is not required and will not be furnished. Finish per the following in lieu of PS 13646:

    A. Apply one coat Epoxy Waterborne primer per MIL-PRF-85582, Type I, Class 2. Alternate primer, one coat Epoxy-Polamide per MIL-PRF-23377, Type I.

    B. Apply two topcoats of Polyurethane per MIL-PRF-85285, Type I, color #17925 (White) per FED-STD-595.

23. OO-ALC/LILE system engineering retains all rights to review and accept MRB'S prior to shipment of discrepant items. All deviations, minor and major, from the engineering drawing package will be submitted for MRB disposition.

24. Prior to contract award, the contractor will certify to the government in writing, full compliance with manuals, specifications, and standards called out and required for the manufacture of this contracted landing gear component/assembly. Contractor is responsible to completely search these manuals, specifications, and standards and fully understand the requirements necessary to manufacture landing gear components. Any questions can be forwarded to this office OO-ALC/LILE.

PREPARED BY	SYMBOL	DATE
DAVID H. ARGYLE	LGMPM	13 Mar 03

REV: A	ENGINEERING DATA REQUIREMENTS CONTINUATION SHEET *(ATTACHMENT "A")*	
PART NUMBER 68A410702-1006		NATIONAL STOCK NUMBER 1620-01-075-3562

25. Install Bushings per the following, as an alternate to PS 17034:

A. The bushing installations shall be accomplished in such a manner as to avoid damage to the finish on the I.D. of the housing into which the bushing is installed, or the finish of the O.D. of the bushing. Forced installation of sub-zero installations, such as the use of a press or hammer is not permitted, and is not acceptable. A small non-metallic hammer may be used to tap the bushing into alignment with the housing bore, or to seat the bushing.

B. Prior to bushing installation, the parts and housing bore shall be cleaned with a cleaning solvent to remove all contamination.

C. Liquid nitrogen shall be used for all sub-zero installations unless some other sub-zero coolant is specified, and approved by OO-ALC/LILE Engineering. The soak time of the bushing in the liquid nitrogen shall be sufficient to allow the bushing to reach the same temperature as the coolant.

D. The bushing shall be installed into the housing immediately upon removal from the coolant with an absolute minimum of lost time. Trial runs shall be accomplished as necessary to minimize installation time which should be in the order of about seven (7) seconds maximum.

E. It may occasionally be necessary to heat the housing into which the bushing is to be installed, in addition to sub-zero cooling of the bushing. Detail parts in process, which do not have paint or sealant or other organic material applied prior to heating, shall be heated by the use of radiant heat techniques, such as thermal blankets, infrared lamps etc.; to the maximum temperature of 250 F. Temperature measuring devices shall be used to monitor heat and shall be located on areas of the part expected to reach maximum temperature. No scaling oxidation, or corrosion shall be permitted.

F. Bushings without flanges shall be installed into housing bore which has received a light coat of sealant per BMS 3-27 (CORBAN 027L), available from Zip Chem Products. Install shrunken bushing and wipe off any excess sealant that may have extruded around the periphery of both ends of the bushings.

G. Bushings with flanges shall be installed in a similar manner as paragraph F, except sealant shall also be applied to face of lug under flange. Sealant shall be applied in such a manner as to ensure complete coverage of inside face of bushing flange when bushing is installed. Wipe off any excess sealant around periphery of bushing flange. Wipe any excess sealant from other end of bushing also. There will not be a bead of sealant about the bushing flange.

H. For bushings with external grease grooves the inside of the lug will be coated with MIL-C-16173E, Class II prior to bushing installation, and face of lug will be coated with BMS 3-27 (CORBAN 027L), per paragraph G, if the applicable bushing has a flange.

Cor-Ban 27L (Formerly ZC-027L)
Manufacturer: Zip Chem Products
400 Jarvis Drive
Morgan Hill, CA 95037
800-648-2661

PREPARED BY	SYMBOL	DATE
DAVID H. ARGYLE	LGMPM	13 Mar 03

REV: A	ENGINEERING DATA REQUIREMENTS CONTINUATION SHEET *(ATTACHMENT "A")*	
PART NUMBER 68A410702-1006		NATIONAL STOCK NUMBER 1620-01-075-3562

26. The required forgings will be procured from the qualified forging source using the original certified forging procedures and dies/tooling.

    A. Prior to contract award the detail part bidder will provide certification from the forging source, to the government that the certified dies and and forging procedures are available and that the forging source has an agreement with the detail part bidder to provide forgings for their use in the event they are the successful bidder.

    B. Prior to production, forging lot qualification will be accomplished as specified on the forging drawing and SAE AMS-F-7190 (STEEL). The contractor will assure that this is, or has been accomplished by the forging source and will submit certified documentation of accomplishment to the Government.

27. FORGING SOURCE, CONTROL AND LOCATION OF DIES:

    A. Forging drawing: 68A410602-2013
       Die number: 6742

    B. Control of forging process: MCDONNEL DOUGLAS CORP.

    C. Location of forging dies: KROPP FORGE COMPANY
       A DIVISION OF ANADITE, INC.
       5301 W. ROOSEVELT ROAD
       CICERO, IL. 60650-1273
       PH. (708) 652-6691
       P.O.C. CHUCK EXT. 324

PREPARED BY	SYMBOL	DATE
DAVID H. ARGYLE	LGMPM	13 Mar 03

SOURCE QUALIFICATION REQUIREMENTS
(PL98-525, SECTION 2319)

STOCK NR (NSN)1620-01-075-3562 PART NUMBER (P/N)68A410702-1006
NOUN: Cylinder Assembly-Main landing gear AIRCRAFT:F-15

SECTION C

QUALIFICATION REQUIREMENTS THAT MUST BE SATISFIED TO BECOME A QUALIFIED SOURCE:

1. Because of the need for uninterrupted item support to military aircraft systems while keeping with the requirements of PL 98-525, the current acquisition need not and generally will not be delayed to provide an offeror an opportunity to qualify. Normal acquisition practices at OO-ALC should preclude the denial of opportunity to any interested offeror.

2. The offeror must provide a pre-contract award qualification article, which meets the requirements of the engineering drawings, material specifications, and process specifications. However, successful completion of the qualification testing does not guarantee any contract award. If the offeror is deemed qualified and awarded the contract, a post-contract award first ariticle exhibit may be required to verify production capability.

3. The qualification article will be subjected to form, fit, and function verification as well as required testing to assure compliance with data list and other applicable procurement criteria. The qualification article shall demonstrate full compatibility and comparability with existing parts.

4. The required materials will be procured from a qualified source and shall meet the requirements of their respective specifications. The offeror will assure that the supplier has accomplished this and shall submit certified documentation of accomplishment of the above requirements to the purchaser along with the pre-contract award qualification article.

5. The required forgings shall be procured from the qualified forging source using the original certified forging procedures and dies. Forging material and lot qualifications shall be accomplished as required in the specified forging drawing, P/N 68A410702-1006 and specification SAE-AMS-F-7190. The offeror shall assure that this is or has been accomplished by the forging source and will submit certified documentation of accomplishment of the above requirements to the government along with the pre-contract award qualification article.

6. The qualification article once submitted will become subject to such testing as deemed necessary by the U.S. Government to prove that the article meets all dimensional, processing and functional requirements. Such testing may result in the destruction of the article. Following completion of necessary testing and evaluation, the article no matter what its condition shall be returned to the contractor or disposed of at his discretion and direction whether it was found acceptable or not.

7. Form verification: The U.S. Government's Quality Verification Center (QVC) will be used to insure compliance with the dimensional requirements of the article. Material and processing compliance will also be verified as required.

8. Fit/function verification: Existing components and government test stands and fixtures will be utilized to verify physical interface and functional performance of articles.

9. Testing for material and process compliance.

(a) Material analysis
(b) Heat treat
(c) Grinding
(d) Plating
(e) Finish
(f) Grain flow
(g) Other

SOURCE QUALIFICATION REQUIREMENTS
(PL98-525, SECTION 2319)

STOCK NR (NSN)1620-01-075-3562 PART NUMBER (P/N)68A410702-1006
NOUN: Cylinder Assembly-Main landing gear AIRCRAFT:F-15

10. Remarks:

a. Organic verification capabilities exist at OO-ALC.

b. Testing requirements outside organic capabilities will be contracted out.

11. The estimated cost of government testing and evaluation is $5,000.

12. Maximum time for testing of the qualification article will not exceed 30 days from receipt at testing agency.

SECTION D

QUALIFICATION WAIVER REQUIREMENTS.

1. An offerer who has had previous experience in the manufacture and qualification of items, which can be correlated with this product, may apply to the design control authority at OO-ALC for a waiver of the above stated qualification requirements.

a. The qualification waiver criteria utilized by the design control authority to perform a qualification analysis are available upon request. The qualification waiver criteria may be used as a guide in preparing the offerer's written input to the design control authority.

b. The burden of proof for written inputs is on the offerer. The design control authority will not pursue authenticity verification of claims made by the offerer of product manufacturing experience with other Government or non-Government agencies. Unsubstantiated claims will not be considered in the waiver analysis process.

c. This waiver will be granted if and only if the design control authority (LILE) can establish the qualifications of the offerer through the evaluation of written inputs from the offerer or from previous knowledge of the offerer's capabilities or from previous experience with the offerer on similar item acquisitions. If there is any doubt about the offerer's capability, the offerer will be required to submit a pre-qualification article. There is no guarantee of qualification by similarity. LILE reserves the right to require a pre-qualification article of all offerers.

2. The current acquisition need not and will not be delayed in order to provide an offerer with an opportunity to meet the requirements for qualification waiver.

3. Maximum time for approval of qualification by similarity will not exceed 15 days.

REVISION: 09

ENGINEERING DATA LIST

* HISTORY *

DATE :	DATA TECH :	ORGN SYMBOL :	PR NR :	APPLICATION:	PAGE
27JUN03	SDA	LGMPM		F15E	1 OF 1

CAGE:	MANUFACTURER NAME:	REFERENCE NR:	NOUN :	NSN :
76301	BOEING CO/MC DONNELL ACFT	68A452602-1001	LANDINGGEAR,RETRAC	1620012332153

CAGE	DRAWING NUMBER	REV	NR SHEETS	NR CARDS	FURN CODE	DIST CODE	NOUN	REQUIREMENTS
98747	OO-ALC/LGMPM-FORM 462 /		0004	0000	S		ENG.DATA RQMNTS. (ATTACH."A")	
76301	PS 13646 /		0000	0000	S		PROCESS SPECIFICATION	OBTAIN DATA FROM WR-ALC (JEDMICS)
76301	PS 15227 /		0000	0000	S		PROCESS SPECIFICATION	OBTAIN DATA FROM WR-ALC (JEDMICS)
76301	PS 17169 /		0000	0000	S		PROCESS SPECIFICATION	OBTAIN DATA FROM WR-ALC (JEDMICS)
76301	PS 20018 /		0000	0000	S		PROCESS SPECIFICATION	OBTAIN DATA FROM WR-ALC (JEDMICS)
76301	PS 23007 /		0000	0000	S		PROCESS SPECIFICATION	OBTAIN DATA FROM WR-ALC (JEDMICS)
76301	PS 23041 /		0000	0000	S		PROCESS SPECIFICATION	OBTAIN DATA FROM WR-ALC (JEDMICS)
76301	ST4M130 /		0000	0000	S		BUSHING	OBTAIN DATA FROM WR-ALC (JEDMICS)
76301	4M139 /		0000	0000	S		BUSHING	OBTAIN DATA FROM WR-ALC (JEDMICS)
76301	68A450631 WITH P/L /		0000	0000	S		BUSHING, TRUNNION-N.L.G.	OBTAIN DATA FROM WR-ALC (JEDMICS)
	/A80342							CHANGE FORM
76301	68A452602 WITH P/L /		0000	0000	S		CYLINDER ASSY-N.L.G.	OBTAIN DATA FROM WR-ALC(JEDMICS)
76301	68A452630 WITH P/L /		0000	0000	S		BUSHING,JURY BRACE-N.L.G.	OBTAIN DATA FROM WR-ALC(JEDMICS)

STANDARD ENGINEERING TEXT

ALL GOVERNMENT/MILITARY SPECIFICATIONS AND STANDARDS WILL NOT BE FURNISHED.
TO OBTAIN THESE SPECS AND STDS WRITE TO:
DODSSP
BUILDING 4/SECTION D
700 ROBINS AVE.
PHILADELPHIA PA. 19111-5098
TELEPHONE: (215) 697-2179
FAX: (215) 697-1462 TO VIEW OR ORDER: HTTP://WWW.DODSSP.DAPS.MIL

ENGINEERING DATA LIST REMARKS

FURNISHED METHOD CODE LEGEND:

C - CLASSIFIED DOCUMENT.
S - FURNISHED WITH SOLICITATION.
M - STABLE BASE DRAWING REQUIRED; FURNISHED WITH CONTRACT AWARD.
X - DATA SUPPLIED (NOT IN EDCARS).
R - FURNISHED BY PCD UPON REQUEST.
P - PARTIAL DOCUMENT FURNISHED.
V - VENDOR DRAWING; (NOT PROVIDED).
G - GOV'T DOCUMENT.
O - OTHERS, CONTRACTOR MUST ACQUIRE.
A - DATA NOT AVAILABLE.

REV:	ENGINEERING DATA REQUIREMENTS *(ATTACHMENT "A")*

NOTE: MILITARY SPECIFICATIONS I/STANDARDS WILL NOT BE FURNISHED IN THE BID SET.

1. THE FOLLOWING INSTRUCTIONS ARE FURNISHED FOR THE MANUFACTURE OF

CYLINDER ASSY-NOSE LANDING GEAR F-15

2. PART NUMBER	3. NATIONAL STOCK NUMBER
68A452602-1001	1620-01-233-2153

4. THE FOLLOWING SPECIFICATIONS/STANDARDS, ETC., WILL BE USED IN LIEU OF THE DATA INDICATED. THE SUPERSEDED DATA WILL NOT BE FURNISHED UNLESS SO INDICATED.

5. Use Material ASTM B196, ASTM 197, and ASTM B194 in lieu of QQ-C-530. (DRAWING 68A452630)

6. Use Material ASTM B196, ASTM B197, and ASTM B194 in lieu of QQ-C-530. Alternate Material, use SAE AMS4533 in lieu of AMS 4533, SAE AMS 4534 in lieu of AMS 4534, and SAE AMS 4535 in lieu of AMS 4535. (DWG. 68A450631)

7. Mark & Identify per MIL-STD-130, as an alternate to PS 16001.

8. For large assemblies and components utilize the following statement in lieu of PS 16001) Serial number shall be vibropeened, or steel stamped, in 0.09" letters 0.004"-0.007" deep in the location indicated. If the drawing does not indicate a location, OO-ALC/LGHLEN will provide S/N location instructions. Serialization of item shall be accomplished as follows: The serialization will begin with the CAGE of the contractor named on the contract, followed by a dash and the 2 digit year of manufacture, followed by a dash and a sequentially unique 3 digit number. A contractor who receives numerous intermittent contracts will start serialization of item with the next number in sequence of the prior contract. If a contract produces more than 999 items, the serial number should begin using 4 digit serial numbers. The serial number should appear like this: " S/N 98747-03-001."

9. Inspection requirements are as follows:

   A. Perform fluorescent penetrant inspection per ASTM E1417, Type I, Method B or C, Level 3 or 4) in lieu of PS 21202 with the following acceptance/rejection criteria: NO DEFECTS ALLOWED. The intent of "NO DEFECTS ALLOWED" is that the inspection is conducted at the required sensitivity level and there will be no indications allowed. The inspector performing the inspection shall be certified to Level II with the inspection procedures developed by a Level III as specified in NAS 410.

   B. Ultrasonic Inspection per MIL-STD-2154 may be used as an alternate to MIL-I-8950.

10. Shot Peen per SAE AMS -S-13165 as an alternate to PS 14023, all requirements of Drawing 68A452602 (NOTE 19) will be accomplished.

11. Heat Treat per SAE AMS-H-7199 as an alternate to PS 15935, DRAWING 68A450631 (NOTE 15).

12. For parts Heat-Treated to 180 KSI and above, any surface that is ground/machined after heat treat, shall be inspected for abusive grinding/machining burns per MIL-STD-867. Grinding shall be per MIL-STD-866.

13. Anodize per MIL-A-8625 (TYPE II, CLASS 1) may be used as an alternate to PS 13201.

14. Hard Anodize per MIL-A-8625 (Type III, Class 3), color "BLACK" #37038 per FED-STD-595 as an alternate to PS 13208.

PREPARED BY	SYMBOL	DATE
DAVID H. ARGYLE	LGMPM	21 May 03

REV:	ENGINEERING DATA REQUIREMENTS CONTINUATION SHEET *(ATTACHMENT "A")*

PART NUMBER	NATIONAL STOCK NUMBER
68A452602-1001	1620-01-233-2153

15. Cadmium Plate per MIL-STD-870 (Type II, Class2) as an alternate to PS 13101.

16. Finish Specification 68A900000 and 40M114 will not be furnished. Finish per the the following as an alternate to PS 13646:

    A. Apply one coat Epoxy Waterborne primer per MIL-PRF-85582, Type I, Class 2. Alternate primer, one coat Epoxy-Polamide per MIL-PRF-23377, Type I.

    B. Apply two topcoats of Polyurethane per MIL-PRF-85285, Type I, color #17925 (White) per FED-STD-595.

17. After contract award the successful bidder shall provide a copy of the processing documentation (routing documents and process specifications) to LGHLEN for final review before production begins.

18. OO-ALC/LGHLEN system engineering retains all rights to review and accept MRB'S prior to shipment of discrepant items, All deviations, minor and major, from the engineering drawing package will be submitted for MRB disposition.

19. Prior to contract award, the contractor will certify to the government in writing, full compliance with manuals, specifications, and standards called out and required for the manufacture of this contracted landing gear component/assembly. Contractor is responsible to completely search these manuals, specifications, and standards and fully understand the requirements necessary to manufacture landing gear components. Any questions can be forwarded to this office, OO-ALC/LGHLEN.

PREPARED BY	SYMBOL	DATE
DAVID H. ARGYLE	LGMPM	21 May 03

20. The required forging shall be procured from the qualified forging source, using the original certified forging procedures and dies/tooling.

    A. Prior to contract award, the detail part bidder shall provide certification, from the forging source, to the Government that the certified dies and procedures are available and that the forging source has an agreement with the detail parts bidder to provide forgings for their use in the event they are the successful bidder.

    B. Prior to production, forging lot qualification shall be accomplished as specified on the forging drawing and SAE AMS-A-22771 (ALUMINUM). The detailed part contractor shall assure that this has been accomplished by the Forging source and shall submit certified documentation of accomplishment to the Government.

21. FORGING SOURCE, CONTROL AND LOCATION OF DIES:

    A. Forging Drawing: 68A452602-2009

    2. Die Number: 12027.31

    3. Control of Forging Process: McDonnel Douglas Corp.

    4. Location of Forging Dies: WEBER METALS, INC.
    16706 S. GARFIELD AVE.
    PARAMOUNT, CA. 90723-0318
    562-602-0260

22. INSTRUCTIONS FOR QUALIFICATION OF NEW FORGING SOURCE.

    Prior to contract award,the contractor shall advise the Government in writing of their intent to procure new forging dies and the proposed forging source. The contractor shall not proceed to obtain new forging dies without the express written consent of the Government- procuring activity. The Government shall have unlimited use of the dies developed under this contract. The contractor shall inform the forging house in writing, at the same time of the order for the dies is placed, that the Government has unlimited use rights of the dies and forward a copy of this letter to the Government Contracting Officer.

23. Apply a thin coating of primer per MIL-PRF-23377 or MIL-PRF-85582 (AFTER CADMIUM PLATING) to all bushing bores and allow to fully cure prior to installation of bushing (PRIMER SHALL NOT OBSTRUCT GREASE PASSAGES).

24. Install Bushings per the following, as an alternate to PS 17034:

A. The bushing installations shall be accomplished in such a manner as to avoid damage to the finish on the I.D. of the housing into which the bushing is installed, or the finish of the O.D. of the bushing. Forced installation of sub-zero installations, such as the use of a press or hammer is not permitted, and is not acceptable. A small non-metallic hammer may be used to tap the bushing into alignment with the housing bore, or to seat the bushing.

B. Prior to bushing installation, the parts and housing bore shall be cleaned with a cleaning solvent to remove all contamination.

C. Liquid nitrogen shall be used for all sub-zero installations unless some other sub-zero coolant is specified, and approved by OO-ALC/LILE Engineering. The soak time of the bushing in the liquid nitrogen shall be sufficient to allow the bushing to reach the same temperature as the coolant.

D. The bushing shall be installed into the housing immediately upon removal from the coolant with an absolute minimum of lost time. Trial runs shall be accomplished as necessary to minimize installation time which should be in the order of about seven (7) seconds maximum.

E. It may occasionally be necessary to heat the housing into which the bushing is to be installed, in addition to sub-zero cooling of the bushing. Detail parts in process, which do not have paint or sealant or other organic material applied prior to heating, shall be heated by the use of radiant heat techniques, such as thermal blankets, infrared lamps etc.; to the maximum temperature of 250 F.Temperature measuring devices shall be used to monitor heat and shall be located on areas of the part expected to reach maximum temperature. No scaling oxidation, or corrosion shall be permitted.

F. Bushings without flanges shall be installed into housing bore which has received a light coat of sealant per MIL-PRF-81733. Install shrunken bushing and wipe off any excess sealant that may have extruded aroumd the periphery of both ends of the bushings.

G. Bushings with flanges shall be installed in a similar manner as paragraph (F). Except sealant shall also be applied to face of lug under flange. Sealant shall be applied in such a manner as to ensure complete coverage of inside face of bushing flange when bushing is installed. Wipe off any excess sealant around periphery of bushing flange forming a bead. Wipe any excess sealant from the other end of the bushing also.

H. For bushings with external grease grooves the inside of the lug will be coated with MIL-C-16173 prior to bushing installation, and face of lug will be coated with MIL-PRF-81733 per paragraph G.

SOURCE QUALIFICATION REQUIREMENTS
(PL98-525, SECTION 2319)

STOCK NR (NSN)1620012332153 PART NUMBER (P/N)68A452602-1001
NOUN: Cylinder-assy, NLG AIRCRAFT:F-15

SECTION C

QUALIFICATION REQUIREMENTS THAT MUST BE SATISFIED TO BECOME A QUALIFIED SOURCE:

1. Because of the need for uninterrupted item support to military aircraft systems while keeping with the requirements of PL 98-525, the current acquisition need not and generally will not be delayed to provide an offeror an opportunity to qualify. Normal acquisition practices at OO-ALC should preclude the denial of opportunity to any interested offeror.

2. The offeror must provide a pre-contract award qualification article, which meets the requirements of the engineering drawings, material specifications, and process specifications. However, successful completion of the qualification testing does not guarantee any contract award. If the offeror is deemed qualified and awarded the contract, a post-contract award first ariticle exhibit may be required to verify production capability.

3. The qualification article will be subjected to form, fit, and function verification as well as required testing to assure compliance with data list and other applicable procurement criteria. The qualification article shall demonstrate full compatibility and comparability with existing parts.

4. The required materials will be procured from a qualified source and shall meet the requirements of their respective specifications. The offeror will assure that the supplier has accomplished this and shall submit certified documentation of accomplishment of the above requirements to the purchaser along with the pre-contract award qualification article.

5. The required forgings shall be procured from the qualified forging source using the original certified forging procedures and dies. Forging material and lot qualifications shall be accomplished as required in the specified forging drawing, P/N 68A452602-2009 and specification MIL-A-22771. The offeror shall assure that this is or has been accomplished by the forging source and will submit certified documentation of accomplishment of the above requirements to the government along with the pre-contract award qualification article.

6. The qualification article once submitted will become subject to such testing as deemed necessary by the U.S. Government to prove that the article meets all dimensional, processing and functional requirements. Such testing may result in the destruction of the article. Following completion of necessary testing and evaluation, the article no matter what its condition shall be returned to the contractor or disposed of at his discretion and direction whether it was found acceptable or not.

7. Form verification: The U.S. Government's Quality Verification Center (QVC) will be used to insure compliance with the dimensional requirements of the article. Material and processing compliance will also be verified as required.

8. Fit/function verification: Existing components and government test stands and fixtures will be utilized to verify physical interface and functional performance of articles.

9. Testing for material and process compliance.
   - (a) Material analysis
   - (b) Heat treat
   - (c) Grinding
   - (d) Plating
   - (e) Finish
   - (f) Grain flow
   - (g) Other

SOURCE QUALIFICATION REQUIREMENTS
(PL98-525, SECTION 2319)

STOCK NR (NSN)1620012332153 PART NUMBER (P/N)68A452602-1001
NOUN: Cylinder-assy, NLG AIRCRAFT:F-15

10. Remarks:

a. Organic verification capabilities exist at OO-ALC.

b. Testing requirements outside organic capabilities will be contracted out.

11. The estimated cost of government testing and evaluation is $2000.

12. Maximum time for testing of the qualification article will not exceed 30 days from receipt at testing agency.

SECTION D

QUALIFICATION WAIVER REQUIREMENTS.

1. An offerer who has had previous experience in the manufacture and qualification of items, which can be correlated with this product, may apply to the design control authority at OO-ALC for a waiver of the above stated qualification requirements.

a. The qualification waiver criteria utilized by the design control authority to perform a qualification analysis are available upon request. The qualification waiver criteria may be used as a guide in preparing the offerer's written input to the design control authority.

b. The burden of proof for written inputs is on the offerer. The design control authority will not pursue authenticity verification of claims made by the offerer of product manufacturing experience with other Government or non-Government agencies. Unsubstantiated claims will not be considered in the waiver analysis process.

c. This waiver will be granted if and only if the design control authority (LGHLEN) can establish the qualifications of the offerer through the evaluation of written inputs from the offerer or from previous knowledge of the offerer's capabilities or from previous experience with the offerer on similar item acquisitions. If there is any doubt about the offerer's capability, the offerer will be required to submit a pre-qualification article. There is no guarantee of qualification by similarity. LGHLEN reserves the right to require a pre-qualification article of all offerers.

2. The current acquisition need not and will not be delayed in order to provide an offerer with an opportunity to meet the requirements for qualification waiver.

3. Maximum time for approval of qualification by similarity will not exceed 15 days.

REVISION: 02

ENGINEERING DATA LIST

* HISTORY *

DATE :	DATA TECH :	ORGN SYMBOL :	PR NR :	APPLICATION:	PAGE
17MAR03	SDA	LGMPM		F15 ACFT	1 OF 1

CAGE:	MANUFACTURER NAME:	REFERENCE NR:	NOUN :	NSN :
76301	BOEING CO/MC DONNELL ACFT	68A410702-1005	CYLINDER,LANDING GE	1620010760547

CAGE	DRAWING NUMBER	REV	NR SHEETS	NR CARDS	FURN CODE	DIST CODE	NOUN	REQUIREMENTS
76301	OO-ALC/LGMPM /	A	0004	0000	S		ENG.DATA RQMNTS.(ATTACH."A")	
76301	PS 15063 /	H	0009	0000	S		PROCESS SPECIFICATION	OBTAIN DATA FROM WR-ALC(JEDMICS)
76301	PS 20018 /	E	0005	0000	S		PROCESS SPECIFICATION	OBTAIN DATA FROM WR-ALC(JEDMICS)
76301	PS 23041 /	N	0023	0000	S		PROCESS SPECIFICATION	OBTAIN DATA FROM WR-ALC(JEDMICS)
76301	ST4M130 /	AT	0000	0000	S		BUSHING,SLEEVE-FLANGE SPECIAL	OBTAIN DATA FROM WR-ALC(JEDMICS)
76301	68A410602 WITH P/L /	D	0003	0000	S		CYLINDER ASSY.-M.L.G.FORGING	OBTAIN DATA FROM WR-ALC(JEDMICS)
76301	68A410670 WITH P/L /		0001	0000	S		BUSHING,OUTR.CYLNDR.LUG-M.L.G.	OBTAIN DATA FROM WR-ALC(JEDMICS)
76301	68A410702 WITH P/L /	G	0003	0000	S		CYLINDER ASSEMBLY-MAIN LND.GEAR	OBTAIN DATA FROM WR-ALC(JEDMICS)
76301	68A410720 WITH P/L /	B	0001	0000	S		BUSHING,TRUNNION PIN-M.L.G.	OBTAIN DATA FROM WR-ALC(JEDMICS)

STANDARD ENGINEERING TEXT

ENGINEERING DATA LIST REMARKS

FURNISHED METHOD CODE LEGEND:

C - CLASSIFIED DOCUMENT.
S - FURNISHED WITH SOLICITATION.
M - STABLE BASE DRAWING REQUIRED; FURNISHED WITH CONTRACT AWARD.
X - DATA SUPPLIED (NOT IN EDCARS).
R - FURNISHED BY PCD UPON REQUEST.
P - PARTIAL DOCUMENT FURNISHED.
V - VENDOR DRAWING; (NOT PROVIDED).
G - GOV'T DOCUMENT.
O - OTHERS, CONTRACTOR MUST ACQUIRE.
A - DATA NOT AVAILABLE.

REV: A	ENGINEERING DATA REQUIREMENTS (ATTACHMENT "A")

NOTE: MILITARY SPECIFICATIONS I/STANDARDS WILL NOT BE FURNISHED IN THE BID SET.

1. THE FOLLOWING INSTRUCTIONS ARE FURNISHED FOR THE MANUFACTURE OF

CYLINDER ASSEMBLY-MAIN LANDING GEAR

2. PART NUMBER	3. NATIONAL STOCK NUMBER
68A410702-1005	1620-01-076-0547

4. THE FOLLOWING SPECIFICATIONS/STANDARDS, ETC., WILL BE USED IN LIEU OF THE DATA INDICATED. THE SUPERSEDED DATA WILL NOT BE FURNISHED UNLESS SO INDICATED.

5. Use Material SAE AMS 6419 in lieu of AMS 6419, (Drawing 68A410602).

6. Use Material SAE AMS 5629 in lieu of AMS 5629, (Drawing 68A410670).

7. Use Material SAE AMS 4640 in lieu of AMS 4640. Alternate Material use SAE AMS 4590 in lieu of AMS 4590. (Drawing 68A410720).

8. Use Material ASTM B196 in lieu of QQ-C-530, (Drawing 68A410720, Note 15).

9. Inspection requirements are as follows:

   A. Perform fluorescent penetrant inspection in lieu of PS 21202, per ASTM E1417, Type I, Method B or C. Level 3 or 4 with the following acceptance/rejection criteria: NO DEFECTS ALLOWED. The intent of "NO DEFECTS ALLOWED" is that the inspection is conducted at the required sensitivity level and there will be no indications allowed. The inspector performing the inspection will be certified to Level II with the inspection procedures developed by a Level III as specified in NAS 410.

   B. Perform Magnetic particle inspection per ASTM E1444, in lieu of PS 21201. Use full wave direct current (FWDC), wet continuous method, flouorescent type with the following acceptance/rejection criteria: NO DEFECTS ALLOWED. The intent of "NO DEFECTS ALLOWED" is that the inspection is conducted at the required sensitivity level and there will be no indications allowed. The inspector performing the inspection will be certified to Level II with the inspection procedures developed by a Level III as specified in NAS 410.

10. Mark & Identify per MIL-STD-130, as an alternate to PS 16001 per drawing requirements.

11. Serialization of item shall be accomplished as follows:

   A. Serial number shall be vibropeened, or steel stamped, in 0.09" letters 0.004"-0.007" deep in the location indicated. If the drawing does not indicate a location, OO-ALC/LILE will provide S/N location instructions. Serialization of item shall be accomplished as follows: The serialization will begin with the CAGE of the contractor named on the contract, followed by a dash and the 2 digit year of manufacture, followed by a dash and a sequentially unique 3 digit number. A contractor who receives numerous intermittent contracts will start serialization of item with the next number in sequence of the prior contract. If a contract produces more than 999 items, the serial number should begin using 4 digit serial numbers. The serial number should appear like this: S/N 98747-95-001."

PREPARED BY	SYMBOL	DATE
DAVID H. ARGYLE	LGMPM	13 Mar 03

REV: A	ENGINEERING DATA REQUIREMENTS CONTINUATION SHEET *(ATTACHMENT "A")*	
PART NUMBER 68A410702-1005		NATIONAL STOCK NUMBER 1620-01-076-0547

12. Heat Treat per SAE AMS-H-6875 as an alternate to PS 15296. Drawing 68A410702(Note 14) and Drawing 68A410602 (Note 16).

13. Heat Treat per SAE AMS-H-6875 as an alternate to PS 15238, Drawing 68A410670(Note 6).

14. Heat Treat per SAE AMS-H-7199 as an alternate to PS 15935, Drawing 68A410720(Note 15).

15. Temper Etch Inspect per MIL-STD-867 as an alternate to PS 21205 & PS 23006. Drawing 68A410702(Note 17), Drawing 68A410602 (Note 19), and (Note XI, Forging Notes).

16. Shot Peen per SAE AMS-S-13165 as an alternate to PS 14023. Drawing 68A410702(Note 23) and Drawing 68A410602 (Note 23).

17. Passivate per SAE AMS-QQ-P-35, ASTM A967(Type 5) as an alterenate to PS 13001. Drawing 68A410670(Note 9).

18. Forging Cleanliness per SAE AMS 2300 in lieu of AMS 2300. Drawing 68A410602 (Note 10).

19. Chromium Plate per MIL-STD-1501(Type II, Class 3) as an alternate to PS 13102. Drawing 68A410702(Notes 26 & 28) and Drawing 68A410602(Notes 26 & 28).

20. Low Embrittlement Cadmium Plate per MIL-STD-870 (Type II, Class 1) as an alternate to PS 13144. Drawing 68A410702, NOTE 19.

21. Low Embrittlement Cadmium Plate per MIL-STD-870 (Type I, Class 2) as an alternate to PS 13144. Drawing 68AA410602, NOTE 35.

22. Finish Specification 68A900000 is not required and will not be furnished. Finish per the following in lieu of PS 13646:

    A. Apply one coat Epoxy Waterborne primer per MIL-PRF-85582, Type I, Class 2. Alternate primer, one coat Epoxy-Polamide per MIL-PRF-23377, Type I.

    B. Apply two topcoats of Polyurethane per MIL-PRF-85285, Type I, color #17925 (White) per FED-STD-595.

23. OO-ALC/LILE system engineering retains all rights to review and accept MRB'S prior to shipment of discrepant items. All deviations, minor and major, from the engineering drawing package will be submitted for MRB disposition.

24. Prior to contract award, the contractor will certify to the government in writing, full compliance with manuals, specifications, and standards called out and required for the manufacture of this contracted landing gear component/assembly. Contractor is responsible to completely search these manuals, specifications, and standards and fully understand the requirements necessary to manufacture landing gear components. Any questions can be forwarded to this office OO-ALC/LILE.

PREPARED BY	SYMBOL	DATE
DAVID H. ARGYLE	LGMPM	13 Mar 03

REV: A	ENGINEERING DATA REQUIREMENTS CONTINUATION SHEET *(ATTACHMENT "A")*	
PART NUMBER 68A410702-1005		NATIONAL STOCK NUMBER 1620-01-076-0547

25. Install Bushings per the following, as an alternate to PS 17034:

A. The bushing installations shall be accomplished in such a manner as to avoid damage to the finish on the I.D. of the housing into which the bushing is installed, or the finish of the O.D. of the bushing. Forced installation of sub-zero installations, such as the use of a press or hammer is not permitted, and is not acceptable. A small non-metallic hammer may be used to tap the bushing into alignment with the housing bore, or to seat the bushing.

B. Prior to bushing installation, the parts and housing bore shall be cleaned with a cleaning solvent to remove all contamination.

C. Liquid nitrogen shall be used for all sub-zero installations unless some other sub-zero coolant is specified, and approved by OO-ALC/LILE Engineering. The soak time of the bushing in the liquid nitrogen shall be sufficient to allow the bushing to reach the same temperature as the coolant.

D. The bushing shall be installed into the housing immediately upon removal from the coolant with an absolute minimum of lost time. Trial runs shall be accomplished as necessary to minimize installation time which should be in the order of about seven (7) seconds maximum.

E. It may occasionally be necessary to heat the housing into which the bushing is to be installed, in addition to sub-zero cooling of the bushing. Detail parts in process, which do not have paint or sealant or other organic material applied prior to heating, shall be heated by the use of radiant heat techniques, such as thermal blankets, infrared lamps etc.; to the maximum temperature of 250 F. Temperature measuring devices shall be used to monitor heat and shall be located on areas of the part expected to reach maximum temperature. No scaling oxidation, or corrosion shall be permitted.

F. Bushings without flanges shall be installed into housing bore which has received a light coat of sealant per BMS 3-27 (CORBAN 027L), available from Zip Chem Products. Install shrunken bushing and wipe off any excess sealant that may have extruded around the periphery of both ends of the bushings.

G. Bushings with flanges shall be installed in a similar manner as paragraph F, except sealant shall also be applied to face of lug under flange. Sealant shall be applied in such a manner as to ensure complete coverage of inside face of bushing flange when bushing is installed. Wipe off any excess sealant around periphery of bushing flange. Wipe any excess sealant from other end of bushing also. There will not be a bead of sealant about the bushing flange.

H. For bushings with external grease grooves the inside of the lug will be coated with MIL-C-16173E, Class II prior to bushing installation, and face of lug will be coated with BMS 3-27 (CORBAN 027L), per paragraph G, if the applicable bushing has a flange.

Cor-Ban 27L (Formerly ZC-027L)
Manufacturer: Zip Chem Products
400 Jarvis Drive
Morgan Hill, CA 95037
800-648-2661

PREPARED BY	SYMBOL	DATE
DAVID H. ARGYLE	LGMPM	13 Mar 03

26. The required forgings will be procured from the qualified forging source using the original certified forging procedures and dies/tooling.

    A. Prior to contract award the detail part bidder will provide certification from the forging source, to the government that the certified dies and and forging procedures are available and that the forging source has an agreement with the detail part bidder to provide forgings for their use in the event they are the successful bidder.

    B. Prior to production, forging lot qualification will be accomplished as specified on the forging drawing and SAE AMS-F-7190 (STEEL). The contractor will assure that this is, or has been accomplished by the forging source and will submit certified documentation of accomplishment to the Government.

27. FORGING SOURCE, CONTROL AND LOCATION OF DIES:

    A. Forging drawing: 68A410602-2013
       Die number: 6742

    B. Control of forging process: MCDONNEL DOUGLAS CORP.

    C. Location of forging dies: KROPP FORGE COMPANY
       A DIVISION OF ANADITE, INC.
       5301 W. ROOSEVELT ROAD
       CICERO, IL. 60650-1273
       PH. (708) 652-6691
       P.O.C. CHUCK EXT. 324

SOURCE QUALIFICATION REQUIREMENTS
(PL98-525, SECTION 2319)

STOCK NR (NSN)1620-01-076-0547 PART NUMBER (P/N)68A410702-1005
NOUN: Cylinder Assembly-Main Landing Gear AIRCRAFT:F-15

SECTION C

QUALIFICATION REQUIREMENTS THAT MUST BE SATISFIED TO BECOME A QUALIFIED SOURCE:

1. Because of the need for uninterrupted item support to military aircraft systems while keeping with the requirements of PL 98-525, the current acquisition need not and generally will not be delayed to provide an offeror an opportunity to qualify. Normal acquisition practices at OO-ALC should preclude the denial of opportunity to any interested offeror.

2. The offeror must provide a pre-contract award qualification article, which meets the requirements of the engineering drawings, material specifications, and process specifications. However, successful completion of the qualification testing does not guarantee any contract award. If the offeror is deemed qualified and awarded the contract, a post-contract award first ariticle exhibit may be required to verify production capability.

3. The qualification article will be subjected to form, fit, and function verification as well as required testing to assure compliance with data list and other applicable procurement criteria. The qualification article shall demonstrate full compatibility and comparability with existing parts.

4. The required materials will be procured from a qualified source and shall meet the requirements of their respective specifications. The offeror will assure that the supplier has accomplished this and shall submit certified documentation of accomplishment of the above requirements to the purchaser along with the pre-contract award qualification article.

5. The required forgings shall be procured from the qualified forging source using the original certified forging procedures and dies. Forging material and lot qualifications shall be accomplished as required in the specified forging drawing, P/N 68A410702-1005 and specification SAE-AMS-F-7190. The offeror shall assure that this is or has been accomplished by the forging source and will submit certified documentation of accomplishment of the above requirements to the government along with the pre-contract award qualification article.

6. The qualification article once submitted will become subject to such testing as deemed necessary by the U.S. Government to prove that the article meets all dimensional, processing and functional requirements. Such testing may result in the destruction of the article. Following completion of necessary testing and evaluation, the article no matter what its condition shall be returned to the contractor or disposed of at his discretion and direction whether it was found acceptable or not.

7. Form verification: The U.S. Government's Quality Verification Center (QVC) will be used to insure compliance with the dimensional requirements of the article. Material and processing compliance will also be verified as required.

8. Fit/function verification: Existing components and government test stands and fixtures will be utilized to verify physical interface and functional performance of articles.

9. Testing for material and process compliance.

(a) Material analysis
(b) Heat treat
(c) Grinding
(d) Plating
(e) Finish
(f) Grain flow
(g) Other

SOURCE QUALIFICATION REQUIREMENTS
(PL98-525, SECTION 2319)

STOCK NR (NSN)1620-01-076-0547 PART NUMBER (P/N)68A410702-1005
NOUN: Cylinder Assembly-Main Landing Gear AIRCRAFT:F-15

10. Remarks:

a. Organic verification capabilities exist at OO-ALC.

b. Testing requirements outside organic capabilities will be contracted out.

11. The estimated cost of government testing and evaluation is $5,000.

12. Maximum time for testing of the qualification article will not exceed 30 days from receipt at testing agency.

SECTION D

QUALIFICATION WAIVER REQUIREMENTS.

1. An offerer who has had previous experience in the manufacture and qualification of items, which can be correlated with this product, may apply to the design control authority at OO-ALC for a waiver of the above stated qualification requirements.

a. The qualification waiver criteria utilized by the design control authority to perform a qualification analysis are available upon request. The qualification waiver criteria may be used as a guide in preparing the offerer's written input to the design control authority.

b. The burden of proof for written inputs is on the offerer. The design control authority will not pursue authenticity verification of claims made by the offerer of product manufacturing experience with other Government or non-Government agencies. Unsubstantiated claims will not be considered in the waiver analysis process.

c. This waiver will be granted if and only if the design control authority (LILE) can establish the qualifications of the offerer through the evaluation of written inputs from the offerer or from previous knowledge of the offerer's capabilities or from previous experience with the offerer on similar item acquisitions. If there is any doubt about the offerer's capability, the offerer will be required to submit a pre-qualification article. There is no guarantee of qualification by similarity. LILE reserves the right to require a pre-qualification article of all offerers.

2. The current acquisition need not and will not be delayed in order to provide an offerer with an opportunity to meet the requirements for qualification waiver.

3. Maximum time for approval of qualification by similarity will not exceed 15 days.

REVISION: *04*

ENGINEERING DATA LIST

* HISTORY *

DATE :	DATA TECH :	ORGN SYMBOL :	PR NR :	APPLICATION:	PAGE
30OCT02	SDB	LGMPM		F-15E	1 OF 1

CAGE:	MANUFACTURER NAME:	REFERENCE NR:	NOUN :	NSN :
76301	BOEING CO/MC DONNELL ACFT	68A412702-1001	CYLINDER,MAIN LANDI	1620012352927

CAGE	DRAWING NUMBER	REV	NR SHEETS	NR CARDS	FURN CODE	DIST CODE	NOUN	REQUIREMENTS
76301	PS 15063 /		0000	0000	S		PROCESS SPECIFICATION	OBTAIN DATA FROM WR-ALC.
76301	PS 23041 /		0000	0000	S		PROCESS SPECIFICATION	OBTAIN DATA FROM WR-ALC.
76301	68A410720 WITH P/L /	B	0000	0000	S		BUSHING	OBTAIN DATA FROM WR-ALC.
76301	68A410721 WITH P/L /		0000	0000	S		BUSHING	OBTAIN DATA FROM WR-ALC.
	/A81003							EO
	/A497042							EO
76301	68A412702 WITH P/L /	E	0000	0000	S		CYLINDER ASSEMBLY	OBTAIN DATA FROM WR-ALC.

STANDARD ENGINEERING TEXT

ENGINEERING DATA LIST REMARKS

FURNISHED METHOD CODE LEGEND:

C - CLASSIFIED DOCUMENT.
S - FURNISHED WITH SOLICITATION.
M - STABLE BASE DRAWING REQUIRED;

X - DATA SUPPLIED (NOT IN EDCARS).
R - FURNISHED BY PCD UPON REQUEST.
P - PARTIAL DOCUMENT FURNISHED.
V - VENDOR DRAWING;

G - GOV'T DOCUMENT.
O - OTHERS, CONTRACTOR MUST ACQUIRE.
A - DATA NOT

REV:	**ENGINEERING DATA REQUIREMENTS** *(ATTACHMENT "A")*

NOTE: MILITARY SPECIFICATIONS/STANDARDS WILL NOT BE FURNISHED IN THE BID SET.

1. THE FOLLOWING INSTRUCTIONS ARE FURNISHED FOR THE MANUFACTURE OF

CYLINDER ASSEMBLY-MAIN LANDING GEAR

2. PART NUMBER	3. NATIONAL STOCK NUMBER
68A412702-1001	1620-01-235-2927

4. THE FOLLOWING SPECIFICATIONS/STANDARDS, ETC., WILL BE USED IN LIEU OF THE DATA INDICATED. THE SUPERSEDED DATA WILL NOT BE FURNISHED UNLESS SO INDICATED.

5. OO-ALC/LILE SYSTEM ENGINEERING RETAINS ALL RIGHTS TO REVIEW AND ACCEPT/REJECT MATERIAL REVIEW BOARD (MRB) DISPOSITIONS PRIOR TO SHIPMENT OF DISCREPANT ITEM. ALL DEVIATIONS, MINOR AND MAJOR, FROM THE ENGINEERING DRAWING PACKAGE SHALL BE SUBMITTED FOR MRB DISPOSITION.

6. PRIOR TO CONTRACT AWARD, THE CONTRACTOR SHALL CERTIFY TO THE GOVERNMENT IN WRITING FULL COMPLIANCE WITH MANUALS, SPECIFICATIONS, AND STANDARDS CALLED OUT AND REQUIRED FOR THE MANUFACTURE OF THIS CONTRACTED LANDING GEAR COMPONENT/ASSEMBLY. CONTRACTOR IS RESPONSIBLE TO COMPLETELY SEARCH THESE MANUALS, SPECIFICATIONS, AND STANDARDS AND FULLY UNDERSTAND THE REQUIREMENTS NECESSARY TO MANUFACTURE LANDING GEAR COMPONENTS. ANY QUESTIONS CAN BE FORWARDED TO THE OFFICE OF OO-ALC/LILE.

7. AFTER CONTRACT AWARD, THE SUCCESSFUL BIDDER SHALL PROVIDE A COPY OF THE PROCESSING DOCUMENTATION (ROUTING DOCUMENTS AND PROCESS SPECIFICATIONS) TO LILE FOR FINAL REVIEW BEFORE PRODUCTION BEGINS.

8. IDENTIFICATION AND MARKING PER MIL-STD-130 AS AN ALTERNATE TO PS 16001.

9. SERIALIZATION OF ITEM SHALL BE ACCOMPLISHED AS FOLLOWS: SERIAL NUMBER SHALL BE VIBROPEENED (WITH VIBRATING PNEUMATIC PENCIL), IN 0.09" LETTERS 0.004"-0.007" DEEP IN THE LOCATION INDICATED. IF THE DRAWING DOES NOT INDICATE A LOCATION, OO-ALC/LILE SHALL PROVIDE S/N LOCATION INSTRUCTIONS. SERIALIZATION OF ITEM SHALL BE ACCOMPLISHED AS FOLLOWS: THE SERIALIZATION SHALL BEGIN WITH THE CAGE (FSCM) OF THE CONTRACTOR NAMED ON THE CONTRACT, FOLLOWED BY A DASH AND THE 2 DIGIT YEAR OF MANUFACTURE, FOLLOWED BY A DASH AND A SEQUENTIALLY UNIQUE 3 DIGIT NUMBER. A CONTRACTOR WHO RECEIVES NUMEROUS INTERMITTENT CONTRACTS SHALL START SERIALIZATION OF ITEM WITH THE NEXT NUMBER IN SEQUENCE OF THE PRIOR CONTRACT. IF A CONTRACT PRODUCES MORE THAN 999 ITEMS, THE SERIAL NUMBER SHOULD BEGIN USING 4 DIGIT SERIAL NUMBERS. THE SERIAL NUMBER SHOULD APPEAR LIKE THIS: "S/N 98747-00-001.

10. MATERIAL SPECIFICATIONS:
    300M STEEL MATERIAL PER SAE AMS 6419 IN LIEU OF AMS 6419.
    17-4PH MATERIAL PER SAE AMS 5643 IN LIEU OF AMS 5643.
    BERYLLIUM COPPER MATERIAL PER ASTM B 196 IN LIEU OF QQ-C-530.

11. MATERIAL CLEANLINESS PER SAE AMS 2300 IN LIEU OF AMS 2300.

12. SHOT PEEN PER SAE AMS-S-13165 MAY BE USED AS AN ALTERNATE TO PS 14023, BUT ALL REQUIREMENTS OF DRAWING 68A412702, NOTE 23 WILL BE ACCOMPLISHED WITH EXCEPTION NOTED ON DRAWING.

PREPARED BY	SYMBOL	DATE
DENISE S. BISHOP	LGMPM	26 FEB 02

13. TEMPER ETCH PER MIL-STD-867 AS AN ALTERNATE TO PS 21205

14. INSPECTION PER SAE AMS-F-7190 AS AN ALTERNATE TO PS 23006.

15. PASSIVATE PER SAE AMS-QQ-P-35, ASTM A967 AS AN ALTERNATE TO PS 13001.

16. HEAT TREAT PER SAE AMS-H-7199 AS AN ALTERNATE TO PS 15935.

17. HEAT TREAT PER SAE AMS-H-6875 AS AN ALTERNATE TO PS 15296 , PS 15227 AND PS 15351 IN LIEU OF PS 15251 (NOTE 14, DWG 68A412702).

18. PARTS HEAT TREATED TO 180KSI AND ABOVE: ANY SURFACE GROUND/MACHINED AFTER HEAT TREAT, SHALL BE INSPECTED FOR ABUSIVE GRINDING/MACHINING BURNS PER MIL-STD-867. GRINDING SHALL BE PER MIL-STD-866.

19. CADMIUM PLATE PER MIL-STD-870 TYPE II ,CLASS 1 IN LIEU OF PS 13444.

20. CADMIUM PLATE PER SAE AMS-QQ-P-416 IN LIEU OF QQ-P-416.

21. CHROMIUM PLATE PER MIL-STD-1501 TYPE I OR II, CLASS 2 AS AN ALTERNATE TO PS 13102.

22. INSPECTION REQUIREMENTS ARE AS FOLLOWS:

A. MAGNETIC PARTICLE INSPECTION PER ASTM E1444 IN LIEU OF PS 21201. FULL WAVE DIRECT CURRENT (FWDC), WET CONTINUOUS METHOD, FLUORESCENT TYPE WITH THE FOLLOWING ACCEPTANCE/REJECTION CRITERIA: NO DEFECTS ALLOWED. THE INTENT OF NO DEFECTS ALLOWED IS THAT THE INSPECTION IS CONDUCTED AT THE REQUIRED SENSITIVITY LEVEL AND THERE SHALL BE NO INDICATIONS ALLOWED. THE INSPECTOR PERFORMING THE INSPECTION SHALL BE CERTIFIED TO LEVEL II WITH THE INSPECTION PROCEDURE DEVELOPED BY A LEVEL III AS SPECIFIED I NAS-410.

B. FLUORESCENT PENETRANT INSPECTION PER ASTM E1417, TYPE I, METHOD B OR C LEVEL 3 OR 4 IN LIEU OF PS 21202 WITH THE FOLLOWING ACCEPTANCE/REJECTION CRITERIA: NO DEFECTS ALLOWED. THE INTENT OF NO DEFECTS ALLOWED IS THAT THE INSPECTION IS CONDUCTED AT THE REQUIRED SENSITIVITY LEVEL AND THERE SHALL BE NO INDICATIONS ALLOWED. THE INSPECTOR PERFORMING THE INSPECTION SHALL BE CERTIFIED TO LEVEL II WITH HE INSPECTION PROCEDURE DEVELOPED BY A LEVEL III AS SPECIFIED IN NAS-410.

23. FINISH SPECIFICATION 68A900000 WILL NOT BE FURNISHED. THE FOLLOWING FINISH MAY BE USED AS AN ALTERNATE TO PS 13646 (NOTE 31, DWG 68A412702):

A. APPLY ONE COAT EPOXY WATERBORN PRIMER PER MIL-PRF-85582, TYPE I, CLASS 2. ALTERNATE ONE COAT OF EPOXY POLYMIDE PRIMER PER MIL-PRF-23377, TYPE I IN LIEU OF MIL-P-23377B.

B. APPLY TWO TOP COATS POLYURETHANE PER MIL-PRF-85285, TYPE I, COLOR NUMBER 17925 (WHITE) PER FED-STD-595.

REV:	ENGINEERING DATA REQUIREMENTS CONTINUATION SHEET *(ATTACHMENT "A")*

PART NUMBER	NATIONAL STOCK NUMBER
68A412702-1001	1620-01-235-2927

24. INSTALL BUSHINGS PER THE FOLLOWING AS AN ALTERNATE TO PS 17034:

A. THE BUSHING INSTALLATIONS SHALL BE ACCOMPLISHED IN SUCH A MANNER AS TO AVOID DAMAGE TO THE FINISH ON THE I.D. OF THE HOUSING INTO WHICH THE BUSHING IS INSTALLED, OR THE FINISH OF THE O.D. OF THE BUSHING. FORCED INSTALLATION OF SUB-ZERO INSTALLATIONS, SUCH AS THE USE OF A PRESS OR HAMMER IS NOT PERMITTED, AND IS NOT ACCEPTABLE. A SMALL NON-METALLIC HAMMER MAY BE USED TO TAP THE BUSHING INTO ALIGNMENT WITH THE HOUSING BORE, OR TO SEAT THE BUSHING.

B. PRIOR TO BUSHING INSTALLATION, THE PARTS AND HOUSING BORE SHALL BE CLEANED WITH CLEANING SOLVENT TO REMOVE ALL CONTAMINATION.

C. LIQUID NITROGEN SHALL BE USED FOR ALL SUB-ZERO INSTALLATIONS UNLESS SOME OTHER SUB-ZERO COOLANT IS SPECIFIED, AND APPROVED BY OO-ALC/LILEC ENGINEERING. THE SOAK TIME OF THE BUSHING IN THE LIQUID NITROGEN SHALL BE SUFFICIENT TO ALLOW THE BUSHING TO REACH THE SAME TEMPERATURE AS THE COOLANT.

D. THE BUSHING SHALL BE INSTALLED INTO THE HOUSING IMMEDIATELY UPON REMOVAL FROM THE COOLANT WITH AN ABSOLUTE MINIMUM OF LOST TIME. TRIAL RUNS SHALL BE ACCOMPLISHED AS NECESSARY TO MINIMIZE INSTALLATION TIME WHICH SHOULD BE IN THE ORDER OF ABOUT SEVEN (7) SECONDS MAXIMUM.

E. IT MAY OCCASIONALLY BE NECESSARY TO HEAT THE HOUSING INTO WHICH THE BUSHING IS TO BE INSTALLED, IN ADDITION TO SUB-ZERO COOLING OF THE BUSHING. DETAIL PARTS IN PROCESS, WHICH DO NOT HAVE PAINT OR SEALANT OR OTHER ORGANIC MATERIAL APPLIED PRIOR TO HEATING, THE PARTS SHALL BE HEATED BY THE USE OF RADIANT HEAT TECHNIQUES, SUCH AS THERMAL BLANKETS, INFRARED LAMPS ETC.; TO THE MAXIMUM TEMPERATURE OF 250 F. THE TEMPERATURE MEASURING DEVICES SHALL BE USED TO MONITOR HEAT AND SHALL BE LOCATED ON AREAS OF THE PART EXPECTED TO REACH MAXIMUM TEMPERATURE. NO SCALING, OXIDATION, OR CORROSION SHALL BE PERMITTED.

F. BUSHINGS WITHOUT FLANGES SHALL BE INSTALLED INTO HOUSING BORE WHICH HAS RECEIVED A LIGHT COAT OF SEALANT PER MIL-S-81733. INSTALL SHRUNKEN BUSHING AND WIPE OFF ANY EXCESS SEALANT THAT MAY HAVE EXTRUDED AROUND THE PERIPHERY OF BOTH ENDS OF THE BUSHINGS.

G. BUSHINGS WITH FLANGES SHALL BE INSTALLED IN A SIMILAR MANNER AS PARAGRAPH (F) EXCEPT SEALANT SHALL ALSO BE APPLIED TO FACE OR LUG UNDER FLANGE. SEALANT SHALL BE APPLIED IN SUCH A MANNER AS TO ENSURE COMPLETE COVERAGE OF INSIDE FACE OF BUSHING FLANGE WHEN BUSHING IS INSTALLED. WIPE OFF ANY EXCESS SEALANT AROUND PERIPHERY OF BUSHING FLANGE FORMING A BEAD. WIPE ANY EXCESS SEALANT FROM OTHER END OF BUSHING ALSO.

H. FOR BUSHINGS WITH EXTERNAL GREASE GROOVES THE INSIDE OF THE LUG WILL BE COATED WITH MIL-C-16173 PRIOR TO BUSHING INSTALLATION AND FACE OF LUG WILL BE COATED WITH MIL-S-81733 PER PARAGRAPH G.

PREPARED BY	SYMBOL	DATE
DENISE S. BISHOP	LGMPM	26 FEB 02

REV:	ENGINEERING DATA REQUIREMENTS CONTINUATION SHEET *(ATTACHMENT "A")*

PART NUMBER	NATIONAL STOCK NUMBER
68A412702-1001	1620-01-235-2927

25. FORGING REQUIREMENT:

A. THE FORGING SHALL BE PROCURED FROM THE ORIGINAL FORGING SOURCE, USING THE ORIGINAL CERTIFIED FORGING PROCEDURES AND DIES/TOOLING.

1. PRIOR TO CONTRACT AWARD, THE DETAILED PART BIDDER SHALL PROVIDE CERTIFICATION, FROM THE FORGING SOURCE, TO THE GOVERNMENT THAT THE CERTIFIED DIES AND PROCEDURES ARE AVAILABLE AND THE FORGING SOURCE HAS AN AGREEMENT WITH THE DETAIL PARTS BIDDER TO PROVIDE FORGINGS FOR THEIR USE IN THE EVENT THEY ARE THE SUCCESSFUL BIDDER.

2. PRIOR TO PRODUCTION, FORGING LOT QUALIFICATION SHALL BE ACCOMPLISHED AS SPECIFIED ON THE FORGING DRAWING AND SAE AMS-F-7190 (STEEL). THE DETAILED PART CONTRACTOR SHALL ASSURE THAT THIS HAS BEEN ACCOMPLISHED BY THE FORGING SOURCE AND SHALL SUBMIT CERTIFIED DOCUMENTATION OF ACCOMPLISHMENT TO THE GOVERNMENT.

26. FORGING SOURCE, CONTROL AND LOCATION OF DIES:

A. FORGING DRAWING: 68A412702 P/N 68A412702-2005

B. DIE NUMBER: 4895

C. CONTROL OF FORGING PROCESS: BOEING

D. LOCATION OF FORGING DIES: PARK DROP FORGE DIV.
777 E. 79TH STREET
CLEVELAND, OH. 44103
PHONE: (216) 431-2900

PREPARED BY	SYMBOL	DATE
DENISE S. BISHOP	LGMPM	26 Feb 02

SOURCE QUALIFICATION REQUIREMENTS
(PL98-525, SECTION 2319)

STOCK NR (NSN)1620012352927 PART NUMBER (P/N)68A412702-1001
NOUN: Cylinder assembly, MLG AIRCRAFT:F-15E

SECTION C

QUALIFICATION REQUIREMENTS THAT MUST BE SATISFIED TO BECOME A QUALIFIED SOURCE:

1. Because of the need for uninterrupted item support to military aircraft systems while keeping with the requirements of PL 98-525, the current acquisition need not and generally will not be delayed to provide an offeror an opportunity to qualify. Normal acquisition practices at OO-ALC should preclude the denial of opportunity to any interested offeror.

2. The offeror must provide a pre-contract award qualification article, which meets the requirements of the engineering drawings, material specifications, and process specifications. However, successful completion of the qualification testing does not guarantee any contract award. If the offeror is deemed qualified and awarded the contract, a post-contract award first ariticle exhibit may be required to verify production capability.

3. The qualification article will be subjected to form, fit, and function verification as well as required testing to assure compliance with data list and other applicable procurement criteria. The qualification article shall demonstrate full compatibility and comparability with existing parts.

4. The required materials will be procured from a qualified source and shall meet the requirements of their respective specifications. The offeror will assure that the supplier has accomplished this and shall submit certified documentation of accomplishment of the above requirements to the purchaser along with the pre-contract award qualification article.

5. The required forgings shall be procured from the qualified forging source using the original certified forging procedures and dies. Forging material and lot qualifications shall be accomplished as required in the specified forging drawing, P/N 68A412702-1001 and specification MIL-F-7190. The offeror shall assure that this is or has been accomplished by the forging source and will submit certified documentation of accomplishment of the above requirements to the government along with the pre-contract award qualification article.

6. The qualification article once submitted will become subject to such testing as deemed necessary by the U.S. Government to prove that the article meets all dimensional, processing and functional requirements. Such testing may result in the destruction of the article. Following completion of necessary testing and evaluation, the article no matter what its condition shall be returned to the contractor or disposed of at his discretion and direction whether it was found acceptable or not.

7. Form verification: The U.S. Government's Quality Verification Center (QVC) will be used to insure compliance with the dimensional requirements of the article. Material and processing compliance will also be verified as required.

8. Fit/function verification: Existing components and government test stands and fixtures will be utilized to verify physical interface and functional performance of articles.

9. Testing for material and process compliance.

(a) Material analysis
(b) Heat treat
(c) Grinding
(d) Plating
(e) Finish
(f) Grain flow
(g) Other

SOURCE QUALIFICATION REQUIREMENTS
(PL98-525, SECTION 2319)

STOCK NR (NSN)1620012352927 PART NUMBER (P/N)68A412702-1001
NOUN: Cylinder assembly, MLG AIRCRAFT:F-15E

10. Remarks:

a. Organic verification capabilities exist at OO-ALC.

b. Testing requirements outside organic capabilities will be contracted out.

11. The estimated cost of government testing and evaluation is $5000.

12. Maximum time for testing of the qualification article will not exceed 30 days from receipt at testing agency.

SECTION D

QUALIFICATION WAIVER REQUIREMENTS.

1. An offerer who has had previous experience in the manufacture and qualification of items, which can be correlated with this product, may apply to the design control authority at OO-ALC for a waiver of the above stated qualification requirements.

a. The qualification waiver criteria utilized by the design control authority to perform a qualification analysis are available upon request. The qualification waiver criteria may be used as a guide in preparing the offerer's written input to the design control authority.

b. The burden of proof for written inputs is on the offerer. The design control authority will not pursue authenticity verification of claims made by the offerer of product manufacturing experience with other Government or non-Government agencies. Unsubstantiated claims will not be considered in the waiver analysis process.

c. This waiver will be granted if and only if the design control authority (LILE) can establish the qualifications of the offerer through the evaluation of written inputs from the offerer or from previous knowledge of the offerer's capabilities or from previous experience with the offerer on similar item acquisitions. If there is any doubt about the offerer's capability, the offerer will be required to submit a pre-qualification article. There is no guarantee of qualification by similarity. LILE reserves the right to require a pre-qualification article of all offerers.

2. The current acquisition need not and will not be delayed in order to provide an offerer with an opportunity to meet the requirements for qualification waiver.

3. Maximum time for approval of qualification by similarity will not exceed 15 days.

REVISION: 05

ENGINEERING DATA LIST

* HISTORY *

DATE : 12JUN02	DATA TECH : SJH	ORGN SYMBOL : LGMPM	PR NR :	APPLICATION: F15E	PAGE 1 OF 1
CAGE: 76301	MANUFACTURER NAME: BOEING CO/MC DONNELL ACFT	REFERENCE NR: 68A452704-1003	NOUN : PISTON,LANDING GEAR	NSN : 1620012329310	

CAGE	DRAWING NUMBER	REV	NR SHEETS	NR CARDS	FURN CODE	DIST CODE	NOUN	REQUIREMENTS
76301	PS 15063 /	H	0000	0000	S		STRESS RELIEF	OBTAIN DATA FROM WRALC JEDMICS
76301	PS 23041 /	N	0000	0000	S		MACHINING REQUIREMENTS	OBTAIN DATA FROM WRALC JEDMICS
76301	ST4M139 /	C	0000	0000	S		BUSHING	OBTAIN DATA FROM WRALC JEDMICS
76301	4M139 /	J	0000	0000	S		BUSHING	OBTAIN DATA FROM WRALC JEDMICS
76301	68A450675 W/PL /	A	0000	0000	S		PLUG	OBTAIN DATA FROM WRALC JEDMICS
76301	68A452704 W/PL /	E	0000	0000	S		PISTON ASSEMBLY	OBTAIN DATA FROM WRALC JEDMICS
	/A397060							EO
	/A497113							EO

STANDARD ENGINEERING TEXT

ENGINEERING DATA LIST REMARKS

FURNISHED METHOD CODE LEGEND:

C - CLASSIFIED DOCUMENT.
S - FURNISHED WITH SOLICITATION.
M - STABLE BASE DRAWING REQUIRED;

X - DATA SUPPLIED (NOT IN EDCARS).
R - FURNISHED BY PCD UPON REQUEST.
P - PARTIAL DOCUMENT FURNISHED.
V - VENDOR DRAWING;

G - GOV'T DOCUMENT.
O - OTHERS, CONTRACTOR MUST ACQUIRE.

REV:	ENGINEERING DATA REQUIREMENTS *(ATTACHMENT "A")*

NOTE: MILITARY SPECIFICATIONS I/STANDARDS WILL NOT BE FURNISHED IN THE BID SET.

1. THE FOLLOWING INSTRUCTIONS ARE FURNISHED FOR THE MANUFACTURE OF

PISTON ASSEMBLY - NOSE LANDING GEAR

2. PART NUMBER	3. NATIONAL STOCK NUMBER
68A452704-1003	1620-01-232-9310

4. THE FOLLOWING SPECIFICATIONS/STANDARDS, ETC., WILL BE USED IN LIEU OF THE DATA INDICATED. THE SUPERSEDED DATA WILL NOT BE FURNISHED UNLESS SO INDICATED.

5. MARKING AND IDENTIFICATION PER MIL-STD-130 IN LIEU OF PS 16001.

6. PER DRAWING REQUIREMENTS, SERIAL NUMBER SHALL BE VIBROPEENED (WITH VIBRATING PNEUMATIC PENCIL) IN 0.09" LETTERS 0.004" - 0.007" DEEP IN THE LOCATION INDICATED. IF THE DRAWING DOES NOT INDICATE A LOCATION, OO-ALC/LILE SHALL PROVIDE S/N LOCATION INSTRUCTIONS. SERIALIZATION OF ITEM SHALL BE ACCOMPLISHED AS FOLLOWS: THE SERIALIZATION SHALL BEGIN WITH THE CAGE (FSCM) OF THE CONTRACTOR NAMED ON THE CONTRACT, FOLLOWED BY A DASH AND THE 2 DIGIT YEAR OF MANUFACTURE, FOLLOWED BY A DASH AND A SEQUENTIALLY UNIQUE 3 DIGIT NUMBER. A CONTRACTOR WHO RECEIVES NUMEROUS INTERMITTENT CONTRACTS SHALL START SERIALIZATION OF ITEM WITH THE NEXT NUMBER IN SEQUENCE OF THE PRIOR CONTRACT. IF A CONTRACT PRODUCES MORE THAN 999 ITEMS, THE SERIAL NUMBER SHOULD BEGIN USING 4 DIGIT SERIAL NUMBERS. THE SERIAL NUMBER SHOULD APPEAR LIKE THIS: "S/N 98747-02-001".

7. PER DRAWING REQUIREMENTS, PERFORM FLUORESCENT PENETRANT INSPECTION PER ASTM E 1417, TYPE I, METHOD B OR C, LEVEL 3 AS AN ALTERNATE TO PS 21202 WITH THE FOLLOWING ACCEPTANCE/REJECTION CRITERIA: NO DEFECTS ALLOWED. THE INTENT OF NO DEFECTS ALLOWED IS THAT THE INSPECTION IS CONDUCTED AT THE REQUIRED SENSITIVITY LEVEL AND THERE SHALL BE NO INDICATIONS ALLOWED. THE INSPECTOR PERFORMING THE INSPECTION SHALL BE CERTIFIED TO LEVEL II WITH THE INSPECTION PROCEDURE DEVELOPED BY A LEVEL III AS SPECIFIED IN NAS-410.

8. PER DRAWING REQUIREMENTS, PERFORM MAGNETIC PARTICLE INSPECTION PER ASTM E 1444 AS AN ALTERNATE TO PS 21201. USE FULL WAVE DIRECT CURRENT (FWDC), WET CONTINUOUS METHOD, FLUORESCENT TYPE WITH THE FOLLOWING ACCEPTANCE/REJECTION CRITERIA: NO DEFECTS ALLOWED. THE INTENT OF NO DEFECTS ALLOWED IS THAT THE INSPECTION IS CONDUCTED AT THE REQUIRED SENSITIVITY LEVEL AND THERE SHALL BE NO INDICATIONS ALLOWED. THE INSPECTOR PERFORMING THE INSPECTION SHALL BE CERTIFIED TO LEVEL II WITH THE INSPECTION PROCEDURE DEVELOPED BY A LEVEL III AS SPECIFIED IN NAS-410.

9. PER DRAWING REQUIREMENTS, TEMPER ETCH INSPECT PER MIL-STD-867 AS AN ALTERNATE TO PS 21205.

10. HEAT TREAT PER SAE AMS-H-6875 AS AN ALTERNATE TO PS 15296 OR PS 15351.

PREPARED BY	SYMBOL	DATE
JOAN HYATT	LGMPM	28 Jun 02

REV:	ENGINEERING DATA REQUIREMENTS CONTINUATION SHEET *(ATTACHMENT "A")*
PART NUMBER 68A452704-1003	NATIONAL STOCK NUMBER 1620-01-232-9310

11. FOR PARTS HEAT-TREATED TO 180 KSI AND ABOVE, ANY SURFACE GROUND/MACHINED AFTER HEAT TREAT SHALL BE INSPECTED FOR ABUSIVE GRINDING/MACHINING BURNS PER MIL-STD-867 IN LIEU OF PS 1205. GRINDING SHALL BE PER MIL-STD-866 IN LIEU OF PS 20710.

12. SHOT PEEN PER SAE AMS- S-13165 AS AN ALTERNATE TO PS 14023.

13. CADMIUM PLATE PER MIL-STD-870 TYPE II CL 2 AS AN ALTERNATIVE TO PS 13144.

14. CHROME PLATE PER MIL-STD-1501 TYPE II CL 3 AS AN ALTERNATIVE TO PS 13102.

15. PER DRAWING REQUIREMENTS, PAINT AS FOLLOWS:

APPLY ONE COAT EPOXY WATERBORNE PRIMER PER MIL-PRF-85582 TYPE 1, CL 2. ALTERNATE ONE COAT OF EPOXY POLYAMIDE PRIMER PER MIL-PRF-23377 TYPE 1. APPLY TWO TOPCOATS POLYURETHANE PER MIL-PRF-85285 TYPE I, COLOR NUMBER 17925 (WHITE) PER FED-STD-595 IN LIEU OF MIL-C-83286 WHICH HAS BEEN CANCELLED.

16. INTERPRET DRAWINGS PER MIL-STD-100 AS AN ALTERNATE TO 40M114.

17. PER DRAWINGS ST4M139 AND 4M139, MATERIAL PER SAE AMS 4640 IN LIEU OF AMS 4640.

18. PER DRAWINGS ST4M139 AND 4M139, CADMIUM PLATE PER SAE AMS QQ-P-416 TYPE II CL 2 IN LIEU OF QQ-P-416 TYPE II CL 2.

19. APPLY A THIN UNIFORM COATING OF PRIMER PER MIL-PRF-23377 OR MIL-PRF-85582 (AFTER CADMIUM PLATING FOR STEEL OR ANODIZING FOR ALUMINUM) TO ALL BUSHING BORES AND ALLOW TO FULLY CURE PRIOR TO INSTALLATION OF BUSHING (PRIMER SHALL NOT OBSTRUCT GREASE PASSAGES).

20. INSTALL BUSHINGS PER THE FOLLOWING AS AN ALTERNATE TO PS 17034:

A. THE BUSHING INSTALLATIONS SHALL BE ACCOMPLISHED IN SUCH A MANNER AS TO AVOID DAMAGE TO THE FINISH ON THE I.D. OF THE HOUSING INTO WHICH THE BUSHING IS INSTALLED, OR THE FINISH OF THE O.D. OF THE BUSHING. FORCED INSTALLATION OF SUB-ZERO INSTALLATIONS, SUCH AS THE USE OF A PRESS OR HAMMER IS NOT PERMITTED, AND IS NOT ACCEPTABLE. A SMALL NON-METALLIC HAMMER MAY BE USED TO TAP THE BUSHING INTO ALIGNMENT WITH THE HOUSING BORE, OR TO SEAT THE BUSHING.

B. PRIOR TO BUSHING INSTALLATION, THE PARTS AND HOUSING BORE SHALL BE CLEANED WITH A CLEANING SOLVENT TO REMOVE ALL CONTAMINATION.

PREPARED BY	SYMBOL	DATE
JOAN HYATT	LGMPM	28 JUNE 2002

C. LIQUID NITROGEN SHALL BE USED FOR ALL SUB-ZERO INSTALLATIONS UNLESS SOME OTHER SUB-ZERO COOLANT IS SPECIFIED, AND APPROVED BY OO-ALC/LILE ENGINEERING. THE SOAK TIME OF THE BUSHING IN THE LIQUID NITROGEN SHALL BE SUFFICIENT TO ALLOW THE BUSHING TO REACH THE SAME TEMPERATURE AS THE COOLANT.

D. THE BUSHING SHALL BE INSTALLED INTO THE HOUSING IMMEDIATELY UPON REMOVAL FROM THE COOLANT WITH AN ABSOLUTE MINIMUM OF LOST TIME. TRIAL RUNS SHALL BE ACCOMPLISHED AS NECESSARY TO MINIMIZE INSTALLATION TIME WHICH SHOULD BE IN THE ORDER OF ABOUT SEVEN (7) SECONDS MAXIMUM.

E. IT MAY OCCASIONALLY BE NECESSARY TO HEAT THE HOUSING INTO WHICH THE BUSHING IS TO BE INSTALLED, IN ADDITION TO SUB-ZERO COOLING OF THE BUSHING. DETAIL PARTS IN PROCESS, WILL NOT HAVE PAINT OR SEALANT OR OTHER ORGANIC MATERIAL APPLIED PRIOR TO HEATING, THE PARTS SHALL BE HEATED BY THE USE OF RADIANT HEAT TECHNIQUES, SUCH AS THERMAL BLANKETS, INFRARED LAMPS ETC.; TO THE MAXIMUM TEMPERATURE OF 250 F. TEMPERATURE MEASURING DEVICES SHALL BE USED TO MONITOR HEAT AND SHALL BE LOCATED ON AREAS OF THE PART EXPECTED TO REACH MAXIMUM TEMPERATURE. NO SCALING, OXIDATION, OR CORROSION SHALL BE PERMITTED.

F. BUSHINGS WITHOUT FLANGES SHALL BE INSTALLED INTO HOUSING BORE WHICH HAS RECEIVED A LIGHT COAT OF SEALANT PER MIL-PRF-81733. INSTALL SHRUNKEN BUSHING AND WIPE OFF ANY EXCESS SEALANT THAT MAY HAVE EXTRUDED AROUND THE PERIPHERY OF BOTH ENDS OF THE BUSHINGS.

G. BUSHINGS WITH FLANGES SHALL BE INSTALLED IN A SIMILAR MANNER AS PARAGRAPH (F) EXCEPT SEALANT SHALL ALSO BE APPLIED TO FACE OF LUG UNDER FLANGE. SEALANT SHALL BE APPLIED IN SUCH A MANNER AS TO ENSURE COMPLETE COVERAGE OF INSIDE FACE OF BUSHING FLANGE WHEN BUSHING IS INSTALLED. WIPE OFF ANY EXCESS SEALANT AROUND PERIPHERY OF BUSHING FLANGE. WIPE ANY EXCESS SEALANT FROM OTHER END OF BUSHING ALSO.

H. FOR BUSHINGS WITH EXTERNAL GREASE GROOVES, THE INSIDE OF THE LUG WILL BE COATED WITH MIL-C-16173 PRIOR TO BUSHING INSTALLATION AND FACE OF LUG WILL BE COATED WITH MIL-PRF-81733 PER PARAGRAPH G, IF BUSHING IS FLANGED.

21. THE FORGING SHALL BE PROCURED FROM THE ORIGINAL FORGING SOURCE, USING THE ORIGINAL CERTIFIED FORGING PROCEDURES AND DIES/TOOLING.

A. PRIOR TO CONTRACT AWARD, THE DETAILED PART BIDDER SHALL PROVIDE CERTIFICATION FROM THE FORGING SOURCE, TO THE GOVERNMENT THAT THE CERTIFIED DIES AND PROCEDURES ARE AVAILABLE AND THE FORGING SOURCE HAS AN AGREEMENT WITH THE DETAIL PARTS BIDDER TO PROVIDE FORGINGS FOR THEIR USE IN THE EVENT THEY ARE THE SUCCESSFUL BIDDER.

B. PRIOR TO PRODUCTION, FORGING LOT QUALIFICATION SHALL BE ACCOMPLISHED AS SPECIFIED ON THE FORGING DRAWING AND SAE AMS-F-7190 FOR STEEL FORGINGS. THE DETAILED PART CONTRACTOR SHALL ASSURE THAT THIS HAS BEEN ACCOMPLISHED BY THE FORGING SOURCE AND SHALL SUBMIT CERTIFIED DOCUMENTATION OF ACCOMPLISHMENT TO THE GOVERNMENT.

REV:	ENGINEERING DATA REQUIREMENTS CONTINUATION SHEET *(ATTACHMENT "A")*

PART NUMBER	NATIONAL STOCK NUMBER
68A452704-1003	1620-01-232-9310

22. FORGING SOURCES, CONTROL AND LOCATION OF DIES:

A. FORGING DRAWING: 68A452704-2001

B. CONTROL OF FORGING PROCESS: KROPP FORGING

C. FORGING DIE NUMBER: 7992

D. LOCATION OF FORGING DIE:

KROPP FORGE COMPANY
A DIVISION OF PARK-OHIO
5301 W. ROOSEVELT ROAD
CICERO, IL. 60650-1273
PHONE: (708) 652-6691
CAGE: 0BFN1

23. IF FORGING SOURCE IS NOT IDENTIFIED PRIOR TO CONTRACT AWARD, THE CONTRACTOR SHALL ADVISE THE GOVERNMENT IN WRITING OF THE INTENT TO PROCURE NEW FORGING DIES AND THE PROPOSED FORGING SOURCE. THE CONTRACTOR SHALL NOT PROCEED TO OBTAIN NEW FORGINGS DIES WITHOUT THE EXPRESS WRITTEN CONSENT OF THE GOVERNMENT-PROCURING ACTIVITY. THE GOVERNMENT SHALL HAVE UNLIMITED USE OF THE DIES DEVELOPED UNDER THIS CONTRACT. THE CONTRACTOR SHALL INFORM THE FORGING HOUSE IN WRITING, AT THE SAME TIME OF THE ORDER FOR THE DIES IS PLACED, THAT THE GOVERNMENT HAS UNLIMITED USE RIGHTS OF THE DIES AND FORWARD A COPY OF THIS LETTER TO THE GOVERNMENT CONTRACTING OFFICER.

24. AFTER CONTRACT AWARD, THE SUCCESSFUL BIDDER SHALL PROVIDE A COPY OF THE PROCESSING DOCUMENTATION (ROUTING DOCUMENTS AND PROCESS SPECIFICATIONS) TO LILE FOR FINAL REVIEW BEFORE PRODUCTION BEGINS.

25. OO-ALC/LILE SYSTEM ENGINEERING RETAINS ALL RIGHTS TO REVIEW AND ACCEPT MRB'S PRIOR TO SHIPMENT OF DISCREPANT ITEM. ALL DEVIATIONS, MINOR AND MAJOR, FROM THE ENGINEERING DRAWING PACKAGE WILL BE SUBMITTED FOR MRB DISPOSITION.

26. PRIOR TO CONTRACT AWARD, THE CONTRACTOR WILL CERTIFY TO THE GOVERNMENT IN WRITING FULL COMPLIANCE WITH MANUALS, SPECIFICATIONS, AND STANDARDS CALLED OUT AND REQUIRED FOR THE MANUFACTURE OF THIS CONTRACTED LANDING GEAR COMPONENTS/ASSEMBLIES. THE CONTRACTOR IS RESPONSIBLE TO COMPLETELY SEARCH THESE MANUALS, SPECIFICATIONS, AND STANDARDS AND FULLY UNDERSTAND THE REQUIREMENTS NECESSARY TO MANUFACTURE THESE COMPONENTS. ANY QUESTIONS CAN BE FORWARDED TO THIS OFFICE OO-ALC/LILE.

PREPARED BY	SYMBOL	DATE
JOAN HYATT	LGMPM	28 Jun 02

SOURCE QUALIFICATION REQUIREMENTS
(PL98-525, SECTION 2319)

STOCK NR (NSN)1620012329310
NOUN: Piston NLG

PART NUMBER (P/N)68A452704-1003
AIRCRAFT:F-15E

SECTION C

QUALIFICATION REQUIREMENTS THAT MUST BE SATISFIED TO BECOME A QUALIFIED SOURCE:

1. Because of the need for uninterrupted item support to military aircraft systems while keeping with the requirements of PL 98-525, the current acquisition need not and generally will not be delayed to provide an offeror an opportunity to qualify. Normal acquisition practices at OO-ALC should preclude the denial of opportunity to any interested offeror.

2. The offeror must provide a pre-contract award qualification article, which meets the requirements of the engineering drawings, material specifications, and process specifications. However, successful completion of the qualification testing does not guarantee any contract award. If the offeror is deemed qualified and awarded the contract, a post-contract award first ariticle exhibit may be required to verify production capability.

3. The qualification article will be subjected to form, fit, and function verification as well as required testing to assure compliance with data list and other applicable procurement criteria. The qualification article shall demonstrate full compatibility and comparability with existing parts.

4. The required materials will be procured from a qualified source and shall meet the requirements of their respective specifications. The offeror will assure that the supplier has accomplished this and shall submit certified documentation of accomplishment of the above requirements to the purchaser along with the pre-contract award qualification article.

5. The required forgings shall be procured from the qualified forging source using the original certified forging procedures and dies. Forging material and lot qualifications shall be accomplished as required in the specified forging drawing, P/N 68A452704-2001 and specification MIL-F-7190. The offeror shall assure that this is or has been accomplished by the forging source and will submit certified documentation of accomplishment of the above requirements to the government along with the pre-contract award qualification article.

6. The qualification article once submitted will become subject to such testing as deemed necessary by the U.S. Government to prove that the article meets all dimensional, processing and functional requirements. Such testing may result in the destruction of the article. Following completion of necessary testing and evaluation, the article no matter what its condition shall be returned to the contractor or disposed of at his discretion and direction whether it was found acceptable or not.

7. Form verification: The U.S. Government's Quality Verification Center (QVC) will be used to insure compliance with the dimensional requirements of the article. Material and processing compliance will also be verified as required.

8. Fit/function verification: Existing components and government test stands and fixtures will be utilized to verify physical interface and functional performance of articles.

9. Testing for material and process compliance.

(a) Material analysis
(b) Heat treat
(c) Grinding
(d) Plating
(e) Finish
(f) Grain flow
(g) Other

SOURCE QUALIFICATION REQUIREMENTS
(PL98-525, SECTION 2319)

STOCK NR (NSN)1620012329310
NOUN: Piston NLG

PART NUMBER (P/N)68A452704-1003
AIRCRAFT:F-15E

10. Remarks:

a. Organic verification capabilities exist at OO-ALC.

b. Testing requirements outside organic capabilities will be contracted out.

11. The estimated cost of government testing and evaluation is $4000.

12. Maximum time for testing of the qualification article will not exceed 30 days from receipt at testing agency.

SECTION D

QUALIFICATION WAIVER REQUIREMENTS.

1. An offerer who has had previous experience in the manufacture and qualification of items, which can be correlated with this product, may apply to the design control authority at OO-ALC for a waiver of the above stated qualification requirements.

a. The qualification waiver criteria utilized by the design control authority to perform a qualification analysis are available upon request. The qualification waiver criteria may be used as a guide in preparing the offerer's written input to the design control authority.

b. The burden of proof for written inputs is on the offerer. The design control authority will not pursue authenticity verification of claims made by the offerer of product manufacturing experience with other Government or non-Government agencies. Unsubstantiated claims will not be considered in the waiver analysis process.

c. This waiver will be granted if and only if the design control authority (LILE) can establish the qualifications of the offerer through the evaluation of written inputs from the offerer or from previous knowledge of the offerer's capabilities or from previous experience with the offerer on similar item acquisitions. If there is any doubt about the offerer's capability, the offerer will be required to submit a pre-qualification article. There is no guarantee of qualification by similarity. LILE reserves the right to require a pre-qualification article of all offerers.

2. The current acquisition need not and will not be delayed in order to provide an offerer with an opportunity to meet the requirements for qualification waiver.

3. Maximum time for approval of qualification by similarity will not exceed 15 days.

REVISION: *05*

ENGINEERING DATA LIST

* HISTORY *

DATE :	DATA TECH :	ORGN SYMBOL :	PR NR :	APPLICATION:	PAGE
25MAR02	SDA	LGMPM		F-15E MLG	1 OF 1

CAGE:	MANUFACTURER NAME:	REFERENCE NR:	NOUN :	NSN :
76301	BOEING CO/MC DONNELL ACFT	68A412702-1002	LANDINGGEAR,RETRAC	1620012363518

CAGE	DRAWING NUMBER	REV	NR SHEETS	NR CARDS	FURN CODE	DIST CODE	NOUN	REQUIREMENTS
76301	PS 15063 /		0000	0000	S		PROCESS SPECIFICATION	OBTAIN DATA FROM WR-ALC(JEDMICS)
76301	PS 23041 /		0000	0000	S		PROCESS SPECIFICATION	OBTAIN DATA FROM WR-ALC(JEDMICS)
76301	68A410720 WITH P/L /	B	0001	0000	S		BUSHING, TRUNNION PIN-M.L.G.	OBTAIN DATA FROM WR-ALC(JEDMICS)
76301	68A410721 WITH P/L /		0002	0000	S		BUSHING, FLANGED, M.L.G.	OBTAIN DATA FROM WR-ALC(JEDMICS)
	/A81003							CHANGE FORM
	/A497042							CHANGE FORM
76301	68A412702 WITH P/L /	E	0003	0000	S		CYLINDER ASSEMBLY-M.L.G.	OBTAIN DATA FROM WR-ALC(JEDMICS)

STANDARD ENGINEERING TEXT

ENGINEERING DATA LIST REMARKS

FURNISHED METHOD CODE LEGEND:

C - CLASSIFIED DOCUMENT.
S - FURNISHED WITH SOLICITATION.
M - STABLE BASE DRAWING REQUIRED; FURNISHED WITH CONTRACT AWARD

X - DATA SUPPLIED (NOT IN EDCARS).
R - FURNISHED BY PCD UPON REQUEST.
P - PARTIAL DOCUMENT FURNISHED.
V - VENDOR DRAWING; (NOT PROVIDED)

G - GOV'T DOCUMENT.
O - OTHERS, CONTRACTOR MUST ACQUIRE.
A - DATA NOT

REV:	ENGINEERING DATA REQUIREMENTS (ATTACHMENT "A")

NOTE: MILITARY SPECIFICATIONS/STANDARDS WILL NOT BE FURNISHED IN THE BID SET.

1. THE FOLLOWING INSTRUCTIONS ARE FURNISHED FOR THE MANUFACTURE OF

CYLINDER ASSEMBLY-MAIN LANDING GEAR

2. PART NUMBER	3. NATIONAL STOCK NUMBER
68A412702-1002	1620-01-236-3518

4. THE FOLLOWING SPECIFICATIONS/STANDARDS, ETC., WILL BE USED IN LIEU OF THE DATA INDICATED. THE SUPERSEDED DATA WILL NOT BE FURNISHED UNLESS SO INDICATED.

5. OO-ALC/LILE SYSTEM ENGINEERING RETAINS ALL RIGHTS TO REVIEW AND ACCEPT/REJECT MATERIAL REVIEW BOARD (MRB) DISPOSITIONS PRIOR TO SHIPMENT OF DISCREPANT ITEM. ALL DEVIATIONS, MINOR AND MAJOR, FROM THE ENGINEERING DRAWING PACKAGE SHALL BE SUBMITTED FOR MRB DISPOSITION.

6. PRIOR TO CONTRACT AWARD, THE CONTRACTOR SHALL CERTIFY TO THE GOVERNMENT IN WRITING FULL COMPLIANCE WITH MANUALS, SPECIFICATIONS, AND STANDARDS CALLED OUT AND REQUIRED FOR THE MANUFACTURE OF THIS CONTRACTED LANDING GEAR COMPONENT/ASSEMBLY. CONTRACTOR IS RESPONSIBLE TO COMPLETELY SEARCH THESE MANUALS, SPECIFICATIONS, AND STANDARDS AND FULLY UNDERSTAND THE REQUIREMENTS NECESSARY TO MANUFACTURE LANDING GEAR COMPONENTS. ANY QUESTIONS CAN BE FORWARDED TO THE OFFICE OF OO-ALC/LILE.

7. AFTER CONTRACT AWARD, THE SUCCESSFUL BIDDER SHALL PROVIDE A COPY OF THE PROCESSING DOCUMENTATION (ROUTING DOCUMENTS AND PROCESS SPECIFICATIONS) TO LILE FOR FINAL REVIEW BEFORE PRODUCTION BEGINS.

8. IDENTIFICATION AND MARKING PER MIL-STD-130 AS AN ALTERNATE TO PS 16001.

9. SERIALIZATION OF ITEM SHALL BE ACCOMPLISHED AS FOLLOWS: SERIAL NUMBER SHALL BE VIBROPEENED (WITH VIBRATING PNEUMATIC PENCIL), IN 0.09" LETTERS 0.004"-0.007" DEEP IN THE LOCATION INDICATED. IF THE DRAWING DOES NOT INDICATE A LOCATION, OO-ALC/LILE SHALL PROVIDE S/N LOCATION INSTRUCTIONS. SERIALIZATION OF ITEM SHALL BE ACCOMPLISHED AS FOLLOWS: THE SERIALIZATION SHALL BEGIN WITH THE CAGE (FSCM) OF THE CONTRACTOR NAMED ON THE CONTRACT, FOLLOWED BY A DASH AND THE 2 DIGIT YEAR OF MANUFACTURE, FOLLOWED BY A DASH AND A SEQUENTIALLY UNIQUE 3 DIGIT NUMBER. A CONTRACTOR WHO RECEIVES NUMEROUS INTERMITTENT CONTRACTS SHALL START SERIALIZATION OF ITEM WITH THE NEXT NUMBER IN SEQUENCE OF THE PRIOR CONTRACT. IF A CONTRACT PRODUCES MORE THAN 999 ITEMS, THE SERIAL NUMBER SHOULD BEGIN USING 4 DIGIT SERIAL NUMBERS. THE SERIAL NUMBER SHOULD APPEAR LIKE THIS: "S/N 98747-00-001.

10. MATERIAL SPECIFICATIONS:
    300M STEEL MATERIAL PER SAE AMS 6419 IN LIEU OF AMS 6419.
    17-4PH MATERIAL PER SAE AMS 5643 IN LIEU OF AMS 5643.
    BERYLLIUM COPPER MATERIAL PER ASTM B 196 IN LIEU OF QQ-C-530.

11. MATERIAL CLEANLINESS PER SAE AMS 2300 IN LIEU OF AMS 2300.

12. SHOT PEEN PER SAE AMS-S-13165 MAY BE USED AS AN ALTERNATE TO PS 14023, BUT ALL REQUIREMENTS OF DRAWING 68A412702, NOTE 23 WILL BE ACCOMPLISHED WITH EXCEPTION NOTED ON DRAWING.

PREPARED BY	SYMBOL	DATE
DAVID H. ARGYLE	LGMPM	19 MAR 02

REV:	ENGINEERING DATA REQUIREMENTS CONTINUATION SHEET (ATTACHMENT "A")

PART NUMBER	NATIONAL STOCK NUMBER
68A412702-1002	1620-01-236-3518

13. TEMPER ETCH PER MIL-STD-867 AS AN ALTERNATE TO PS 21205

14. INSPECTION PER SAE AMS-F-7190 AS AN ALTERNATE TO PS 23006.

15. PASSIVATE PER SAE AMS-QQ-P-35, ASTM A967 AS AN ALTERNATE TO PS 13001.

16. HEAT TREAT PER SAE AMS-H-7199 AS AN ALTERNATE TO PS 15935.

17. HEAT TREAT PER SAE AMS-H-6875 AS AN ALTERNATE TO PS 15296, PS 15227 AND PS 15351 IN LIEU OF PS 15251 (NOTE 14, DG. 68412702).

18. PARTS HEAT TREATED TO 180KSI AND ABOVE: ANY SURFACE GROUND/MACHINED AFTER HEAT, SHALL BE INSPECTED FOR ABUSIVE GRINDING/MACHINING BURNS PER MIL-STD-867. GRINDING SHALL BE PER MIL-STD-866.

19. CADMIUM PLATE PER MIL-STD-870 TYPE II, CLASS 1 AS AN ALTERNATE TO PS 13444.

20. CADMIUM PLATE PER MIL-STD-870 IN LIEU OF QQ-P-416.

21. CHROMIUM PLATE PER MIL-STD-1501 TYPE I OR II, CLASS 2 AS AN ALTERNATE TO PS 13102.

22. INSPECTION REQUIREMENTS ARE AS FOLLOWS:

A. MAGNETIC PARTICLE INSPECTION PER ASTM E1444 IN LIEU OF PS 21201. FULL WAVE DIRECT CURRENT (FWDC), WET CONTINUOUS METHOD, FLUORESCENT TYPE WITH THE FOLLOWING ACCEPTANCE/REJECTION CRITERIA: NO DEFECTS ALLOWED. THE INTENT OF NO DEFECTS ALLOWED IS THAT THE INSPECTION IS CONDUCTED AT THE REQUIRED SENSITIVITY LEVEL AND THERE SHALL BE NO INDICATIONS ALLOWED. THE INSPECTOR PERFORMING THE INSPECTION SHALL BE CERTIFIED TO LEVEL II WITH THE INSPECTION PROCEDURE DEVELOPED BY A LEVEL III AS SPECIFIED I NAS-410.

B. FLUORESCENT PENETRANT INSPECTION PER ASTM E1417, TYPE I, METHOD B OR C LEVEL 3 OR 4 IN LIEU OF PS 21202 WITH THE FOLLOWING ACCEPTANCE/REJECTION CRITERIA: NO DEFECTS ALLOWED. THE INTENT OF NO DEFECTS ALLOWED IS THAT THE INSPECTION IS CONDUCTED AT THE REQUIRED SENSITIVITY LEVEL AND THERE SHALL BE NO INDICATIONS ALLOWED. THE INSPECTOR PERFORMING THE INSPECTION SHALL BE CERTIFIED TO LEVEL II WITH HE INSPECTION PROCEDURE DEVELOPED BY A LEVEL III AS SPECIFIED IN NAS-410.

23. FINISH SPECIFICATION 68A900000 WILL NOT BE FURNISHED. THE FOLLOWING FINISH MAY BE USED AS AN ALTERNATE TO PS 13646 (NOTE 31, DWG 68A412702):

A. APPLY ONE COAT EPOXY WATERBORN PRIMER PER MIL-PRF-85582, TYPE I, CLASS 2. ALTERNATE ONE COAT OF EPOXY POLYMIDE PRIMER PER MIL-PRF-23377, TYPE I IN LIEU OF MIL-P-23377B.

B. APPLY TWO TOP COATS POLYURETHANE PER MIL-PRF-85285, TYPE I, COLOR NUMBER 17925 (WHITE) PER FED-STD-595.

PREPARED BY	SYMBOL	DATE
DAVID H. ARGYLE	LGMPM	19 MAR 02

REV:	ENGINEERING DATA REQUIREMENTS CONTINUATION SHEET (ATTACHMENT "A")

PART NUMBER	NATIONAL STOCK NUMBER
68A412702-1002	1620-01-236-3518

24. INSTALL BUSHINGS PER THE FOLLOWING AS AN ALTERNATE TO PS 17034:

A. THE BUSHING INSTALLATIONS SHALL BE ACCOMPLISHED IN SUCH A MANNER AS TO AVOID DAMAGE TO THE FINISH ON THE I.D. OF THE HOUSING INTO WHICH THE BUSHING IS INSTALLED, OR THE FINISH OF THE O.D. OF THE BUSHING. FORCED INSTALLATION OF SUB-ZERO INSTALLATIONS, SUCH AS THE USE OF A PRESS OR HAMMER IS NOT PERMITTED, AND IS NOT ACCEPTABLE. A SMALL NON-METALLIC HAMMER MAY BE USED TO TAP THE BUSHING INTO ALIGNMENT WITH THE HOUSING BORE, OR TO SEAT THE BUSHING.

B. PRIOR TO BUSHING INSTALLATION, THE PARTS AND HOUSING BORE SHALL BE CLEANED WITH CLEANING SOLVENT TO REMOVE ALL CONTAMINATION.

C. LIQUID NITROGEN SHALL BE USED FOR ALL SUB-ZERO INSTALLATIONS UNLESS SOME OTHER SUB-ZERO COOLANT IS SPECIFIED, AND APPROVED BY OO-ALC/LILEC ENGINEERING. THE SOAK TIME OF THE BUSHING IN THE LIQUID NITROGEN SHALL BE SUFFICIENT TO ALLOW THE BUSHING TO REACH THE SAME TEMPERATURE AS THE COOLANT.

D. THE BUSHING SHALL BE INSTALLED INTO THE HOUSING IMMEDIATELY UPON REMOVAL FROM THE COOLANT WITH AN ABSOLUTE MINIMUM OF LOST TIME. TRIAL RUNS SHALL BE ACCOMPLISHED AS NECESSARY TO MINIMIZE INSTALLATION TIME WHICH SHOULD BE IN THE ORDER OF ABOUT SEVEN (7) SECONDS MAXIMUM.

E. IT MAY OCCASIONALLY BE NECESSARY TO HEAT THE HOUSING INTO WHICH THE BUSHING IS TO BE INSTALLED, IN ADDITION TO SUB-ZERO COOLING OF THE BUSHING. DETAIL PARTS IN PROCESS, WHICH DO NOT HAVE PAINT OR SEALANT OR OTHER ORGANIC MATERIAL APPLIED PRIOR TO HEATING, THE PARTS SHALL BE HEATED BY THE USE OF RADIANT HEAT TECHNIQUES, SUCH AS THERMAL BLANKETS, INFRARED LAMPS ETC.; TO THE MAXIMUM TEMPERATURE OF 250 F. THE TEMPERATURE MEASURING DEVICES SHALL BE USED TO MONITOR HEAT AND SHALL BE LOCATED ON AREAS OF THE PART EXPECTED TO REACH MAXIMUM TEMPERATURE. NO SCALING, OXIDATION, OR CORROSION SHALL BE PERMITTED.

F. BUSHINGS WITHOUT FLANGES SHALL BE INSTALLED INTO HOUSING BORE WHICH HAS RECEIVED A LIGHT COAT OF SEALANT PER MIL-S-81733. INSTALL SHRUNKEN BUSHING AND WIPE OFF ANY EXCESS SEALANT THAT MAY HAVE EXTRUDED AROUND THE PERIPHERY OF BOTH ENDS OF THE BUSHINGS.

G. BUSHINGS WITH FLANGES SHALL BE INSTALLED IN A SIMILAR MANNER AS PARAGRAPH (F) EXCEPT SEALANT SHALL ALSO BE APPLIED TO FACE OR LUG UNDER FLANGE. SEALANT SHALL BE APPLIED IN SUCH A MANNER AS TO ENSURE COMPLETE COVERAGE OF INSIDE FACE OF BUSHING FLANGE WHEN BUSHING IS INSTALLED. WIPE OFF ANY EXCESS SEALANT AROUND PERIPHERY OF BUSHING FLANGE FORMING A BEAD. WIPE ANY EXCESS SEALANT FROM OTHER END OF BUSHING ALSO.

H. FOR BUSHINGS WITH EXTERNAL GREASE GROOVES THE INSIDE OF THE LUG WILL BE COATED WITH MIL-C-16173 PRIOR TO BUSHING INSTALLATION AND FACE OF LUG WILL BE COATED WITH MIL-S-81733 PER PARAGRAPH G.

PREPARED BY	SYMBOL	DATE
DAVID H. ARGYLE	LGMPM	19 MAR 02

REV:	ENGINEERING DATA REQUIREMENTS CONTINUATION SHEET (ATTACHMENT "A")

PART NUMBER	NATIONAL STOCK NUMBER
68A412702-1002	1620-01-236-3518

25. FORGING REQUIREMENT:

A. THE FORGING SHALL BE PROCURED FROM THE ORIGINAL FORGING SOURCE, USING THE ORIGINAL CERTIFIED FORGING PROCEDURES AND DIES/TOOLING.

1. PRIOR TO CONTRACT AWARD, THE DETAILED PART BIDDER SHALL PROVIDE CERTIFICATION, FROM THE FORGING SOURCE, TO THE GOVERNMENT THAT THE CERTIFIED DIES AND PROCEDURES ARE AVAILABLE AND THE FORGING SOURCE HAS AN AGREEMENT WITH THE DETAIL PARTS BIDDER TO PROVIDE FORGINGS FOR THEIR USE IN THE EVENT THEY ARE THE SUCCESSFUL BIDDER.

2. PRIOR TO PRODUCTION, FORGING LOT QUALIFICATION SHALL BE ACCOMPLISHED AS SPECIFIED ON THE FORGING DRAWING AND SAE AMS-F-7190 (STEEL). THE DETAILED PART CONTRACTOR SHALL ASSURE THAT THIS HAS BEEN ACCOMPLISHED BY THE FORGING SOURCE AND SHALL SUBMIT CERTIFIED DOCUMENTATION OF ACCOMPLISHMENT TO THE GOVERNMENT.

26. FORGING SOURCE, CONTROL AND LOCATION OF DIES:

A. FORGING DRAWING: 68A412702 P/N 68A412702-2006

B. DIE NUMBER: 4896

C. CONTROL OF FORGING PROCESS: BOEING

D. LOCATION OF FORGING DIES: PARK DROP FORGE DIV.
777 E. 79TH STREET
CLEVELAND, OH. 44103
PHONE: (216) 431-2900

27. DISREGARD NOTE 36 ON DWG. 68A412702.

PREPARED BY	SYMBOL	DATE
DAVID H. ARGYLE	LGMPM	19 MAR 02

SOURCE QUALIFICATION REQUIREMENTS
(PL98-525, SECTION 2319)

STOCK NR (NSN)1620012363518 PART NUMBER (P/N)68A412702-1002
NOUN: Cylinder Assembly-Main Landing Gear AIRCRAFT:F-15E

SECTION C

QUALIFICATION REQUIREMENTS THAT MUST BE SATISFIED TO BECOME A QUALIFIED SOURCE:

1. Because of the need for uninterrupted item support to military aircraft systems while keeping with the requirements of PL 98-525, the current acquisition need not and generally will not be delayed to provide an offeror an opportunity to qualify. Normal acquisition practices at OO-ALC should preclude the denial of opportunity to any interested offeror.

2. The offeror must provide a pre-contract award qualification article, which meets the requirements of the engineering drawings, material specifications, and process specifications. However, successful completion of the qualification testing does not guarantee any contract award. If the offeror is deemed qualified and awarded the contract, a post-contract award first ariticle exhibit may be required to verify production capability.

3. The qualification article will be subjected to form, fit, and function verification as well as required testing to assure compliance with data list and other applicable procurement criteria. The qualification article shall demonstrate full compatibility and comparability with existing parts.

4. The required materials will be procured from a qualified source and shall meet the requirements of their respective specifications. The offeror will assure that the supplier has accomplished this and shall submit certified documentation of accomplishment of the above requirements to the purchaser along with the pre-contract award qualification article.

5. The required forgings shall be procured from the qualified forging source using the original certified forging procedures and dies. Forging material and lot qualifications shall be accomplished as required in the specified forging drawing, P/N 68A412702-1002 and specification MIL-F-7190. The offeror shall assure that this is or has been accomplished by the forging source and will submit certified documentation of accomplishment of the above requirements to the government along with the pre-contract award qualification article.

6. The qualification article once submitted will become subject to such testing as deemed necessary by the U.S. Government to prove that the article meets all dimensional, processing and functional requirements. Such testing may result in the destruction of the article. Following completion of necessary testing and evaluation, the article no matter what its condition shall be returned to the contractor or disposed of at his discretion and direction whether it was found acceptable or not.

7. Form verification: The U.S. Government's Quality Verification Center (QVC) will be used to insure compliance with the dimensional requirements of the article. Material and processing compliance will also be verified as required.

8. Fit/function verification: Existing components and government test stands and fixtures will be utilized to verify physical interface and functional performance of articles.

9. Testing for material and process compliance.

(a) Material analysis
(b) Heat treat
(c) Grinding
(d) Plating
(e) Finish
(f) Grain flow
(g) Other

SOURCE QUALIFICATION REQUIREMENTS
(PL98-525, SECTION 2319)

STOCK NR (NSN)1620012363518 PART NUMBER (P/N)68A412702-1002
NOUN: Cylinder Assembly-Main Landing Gear AIRCRAFT:F-15E

10. Remarks:

a. Organic verification capabilities exist at OO-ALC.

b. Testing requirements outside organic capabilities will be contracted out.

11. The estimated cost of government testing and evaluation is $5000.

12. Maximum time for testing of the qualification article will not exceed 30 days from receipt at testing agency.

SECTION D

QUALIFICATION WAIVER REQUIREMENTS.

1. An offerer who has had previous experience in the manufacture and qualification of items, which can be correlated with this product, may apply to the design control authority at OO-ALC for a waiver of the above stated qualification requirements.

a. The qualification waiver criteria utilized by the design control authority to perform a qualification analysis are available upon request. The qualification waiver criteria may be used as a guide in preparing the offerer's written input to the design control authority.

b. The burden of proof for written inputs is on the offerer. The design control authority will not pursue authenticity verification of claims made by the offerer of product manufacturing experience with other Government or non-Government agencies. Unsubstantiated claims will not be considered in the waiver analysis process.

c. This waiver will be granted if and only if the design control authority (LILE) can establish the qualifications of the offerer through the evaluation of written inputs from the offerer or from previous knowledge of the offerer's capabilities or from previous experience with the offerer on similar item acquisitions. If there is any doubt about the offerer's capability, the offerer will be required to submit a pre-qualification article. There is no guarantee of qualification by similarity. LILE reserves the right to require a pre-qualification article of all offerers.

2. The current acquisition need not and will not be delayed in order to provide an offerer with an opportunity to meet the requirements for qualification waiver.

3. Maximum time for approval of qualification by similarity will not exceed 15 days.

REVISION: *07*

ENGINEERING DATA LIST

* HISTORY *

DATE : 01OCT02	DATA TECH : SCH	ORGN SYMBOL : LGMPM	PR NR :	APPLICATION: F-16	PAGE 1 OF 1

CAGE: 13002	MANUFACTURER NAME: GOODRICH	REFERENCE NR: 2007644-103	NOUN : CYLINDER ASSY	NSN : 1620012590559

CAGE	DRAWING NUMBER	REV	NR SHEETS	NR CARDS	FURN CODE	DIST CODE	NOUN	REQUIREMENTS
39661	MM4990 /		0000	0000	S		HEAT TREAT SPEC	
39661	MM5542 /		0000	0000	S		CADMIUM PLATING SPECIFICATION	
98747	OO-ALC FORM 462 /		0004	0000	S		ENGR DATA RQMTS (ATTACH A)	
17576	2006404-247 /	J	0001	0000	S		BUSHING SLEEVE - LANDING GEAR	
17576	2007404-81 /		0001	0000	S		BUSHING SLEEVE LANDING GEAR	
17576	2007644 /	E	0001	0000	S		CYLINDER ASSY, INNER SHK STR NLG	
17576	2007744 /	A	0001	0000	S		CYL INNER SH ST NLG FORGING OF	

STANDARD ENGINEERING TEXT

ENGINEERING DATA LIST REMARKS

FURNISHED METHOD CODE LEGEND:

C - CLASSIFIED DOCUMENT.
S - FURNISHED WITH SOLICITATION.
M - STABLE BASE DRAWING REQUIRED;
X - DATA SUPPLIED (NOT IN EDCARS).
R - FURNISHED BY PCD UPON REQUEST.
P - PARTIAL DOCUMENT FURNISHED.
V - VENDOR DRAWING;
G - GOV'T DOCUMENT.
O - OTHERS, CONTRACTOR MUST ACQUIRE.
A - DATA NOT

REV:	ENGINEERING DATA REQUIREMENTS *(ATTACHMENT "A")*

NOTE: MILITARY SPECIFICATIONS I/STANDARDS WILL NOT BE FURNISHED IN THE BID SET.

1. THE FOLLOWING INSTRUCTIONS ARE FURNISHED FOR THE MANUFACTURE OF

CYLINDER ASSY, INNER - SHOCK STRUT, NLG

2. PART NUMBER	3. NATIONAL STOCK NUMBER
2007644-103	1620-01-259-0559

4. THE FOLLOWING SPECIFICATIONS/STANDARDS, ETC., WILL BE USED IN LIEU OF THE DATA INDICATED. THE SUPERSEDED DATA WILL NOT BE FURNISHED UNLESS SO INDICATED.

5. MATL REF: 300M STEEL PER AMS 6414, AMS 6257, CLASS 3, IN LIEU OF MIL-S-8844, CLEANLINESS PER SAE AMS 2300 IN LIEU OF AMS 2300.

6. HEAT TREAT PER SAE AMS-H-6875 IN LIEU OF MIL-H-6875.

7. FOR PARTS HEAT-TREATED TO 180 KSI AND ABOVE, ANY SURFACE GROUND/MACHINED AFTER HEAT TREAT, SHALL BE INSPECTED FOR ABUSIVE GRINDING/MACHINING BURNS PER MIL-STD-867. GRINDING SHALL BE PER MIL-STD-866.

8. PERFORM MAGNETIC PARTICLE INSPECTION PER ASTM E 1444 IN LIEU OF MIL-I-6868. USE FULL WAVE DIRECT CURRENT (FWDC), WET CONTINUOUS METHOD, FLUORESCENT TYPE WITH THE FOLLOWING ACCEPTANCE/REJECTION CRITERIA: NO DEFECTS ALLOWED. THE INTENT OF NO DEFECTS ALLOWED IS THAT THE INSPECTION IS CONDUCTED AT THE REQUIRED SENSITIVITY LEVEL AND THERE SHALL BE NO INDICATIONS ALLOWED. THE INSPECTOR PERFORMING THE INSPECTION SHALL BE CERTIFIED TO LEVEL II WITH THE INSPECTION PROCEDURE DEVELOPED BY A LEVEL III AS SPECIFIED IN NAS-410.

9. SHOT PEEN PER SAE AMS-S-13165 IN LIEU OF MIL-S-13165.

10. CHROME PLATE TO DRAWING REQUIREMENTS PER SAE AMS-S-QQ-C-320 IN LIEU OF QQ-C-320.

11. PAINT REQUIREMENTS AS FOLLOWS:

A. APPLY ONE COAT EPOXY WATERBORNE PRIMER PER MIL-PRF-85582, TYPE I, CLASS 2. ALTERNATE ONE COAT OF EPOXY POLYAMIDE PRIMER PER MIL-PRF-23377, TYPE I IN LIEU OF MIL-P-23377.

B. APPLY TWO TOPCOATS POLYURETHANE PER MIL-PRF-85285, TYPE I, COLOR NUMBER 17925 (WHITE) PER FED-STD-595, IN LIEU OF MIL-C-83286.

12. SPECIFICATION MM4951 CADMIUM PLATING WILL NOT BE FURNISHED AS IT IS LIMITED (PROPRIETARY) DATA. AS AN ALTERNATE USE SPEC MM5542, CADMIUM PLATING. (PROVIDED)

13. CORROSION PROTECTION PER MIL-C-16173, GRADE 1 OR MIL-C-11796, CLASS 1 OR 2 IN LIEU OF MM5752.

14. IDENTIFICATION AND MARKING PER MIL-STD-130 IN LIEU OF TM1040.

15. PERFORM FLUORESCENT PENETRANT INSPECTION PER ASTM E 1417, TYPE I, METHOD B OR C, LEVEL 3 OR 4 IN LIEU OF MIL-I-6866 WITH THE FOLLOWING ACCEPTANCE/REJECTION CRITERIA: NO DEFECTS ALLOWED. THE INTENT OF NO DEFECTS ALLOWED IS THAT THE INSPECTION IS CONDUCTED AT THE REQUIRED SENSITIVITY LEVEL AND THERE SHALL BE NO INDICATIONS ALLOWED. THE INSPECTOR PERFORMING THE INSPECTION SHALL BE CERTIFIED TO LEVEL II WITH THE INSPECTION PROCEDURE DEVELOPED BY A LEVEL III AS SPECIFIED IN NAS-410.

PREPARED BY	SYMBOL	DATE
CAROL HYER	LGMPM	5 Nov 02

REV:	ENGINEERING DATA REQUIREMENTS CONTINUATION SHEET *(ATTACHMENT "A")*
PART NUMBER 2007644-103	NATIONAL STOCK NUMBER 1620-01-259-0559

16. SERIAL NUMBER SHALL BE VIBROPEENED (WITH VIBRATING PNEUMATIC PENCIL), IN 0.09" LETTERS 0.004" - 0.007" DEEP IN THE LOCATION INDICATED. IF THE DRAWING DOES NOT INDICATE A LOCATION, OO-ALC/LGHLEN SHALL PROVIDE S/N LOCATION INSTRUCTIONS. SERIALIZATION OF ITEM SHALL BE ACCOMPLISHED AS FOLLOWS: THE SERIALIZATION SHALL BEGIN WITH THE CAGE OF THE CONTRACTOR NAMED ON THE CONTRACT, FOLLOWED BY A DASH AND THE 2 DIGIT YEAR OF MANUFACTURE, FOLLOWED BY A DASH AND A SEQUENTIALLY UNIQUE 3 DIGIT NUMBER. A CONTRACTOR WHO RECEIVES NUMEROUS INTERMITTENT CONTRACTS SHALL START SERIALIZATION OF ITEM WITH THE NEXT NUMBER IN SEQUENCE OF THE PRIOR CONTRACT. IF A CONTRACT PRODUCES MORE THAN 999 ITEMS, THE SERIAL NUMBER SHOULD BEGIN USING 4 DIGIT SERIAL NUMBERS. THE SERIAL NUMBER SHOULD APPEAR LIKE THIS: "S/N 98747-02-001".

17. APPLY A THIN UNIFORM COATING OF PRIMER PER MIL-PRF-23377 OR MIL-PRF-85582 (AFTER CADMIUM PLATING) TO ALL BUSHING BORES AND ALLOW TO FULLY CURE, PRIOR TO INSTALLATION OF BUSHING (PRIMER SHALL NOT OBSTRUCT GREASE PASSAGES).

18. PER DRAWING 2006404-247, USE MATERIAL SAE AMS 4640 IN LIEU OF AMS 4640.

19 CADMIUM PLATE TO DRAWING SPECIFICATION PER SAE AMS-QQ-P-416 IN LIEU OF QQ-P-416.

20. PER DRAWING 2007644, FLAGNOTE 36 IS NO LONGER APPLICABLE AS NO HAND FORGINGS CAN BE USED.

21. PER DRAWING 2007404-81, USE MATERIAL ASTM B196, ASTM B197, ASTM B194 IN LIEU OF QQ-C-530.

22. OO-ALC/LGHLEN SYSTEM ENGINEERING RETAINS ALL RIGHTS TO REVIEW AND ACCEPT MATERIAL REVIEW BOARD (MRB'S) DISPOSITIONS PRIOR TO SHIPMENT OF DISCREPANT ITEM. ALL DEVIATIONS, MINOR AND MAJOR, FROM THE ENGINEERING DRAWING PACKAGE SHALL BE SUBMITTED FOR MRB DISPOSITION.

23. PRIOR TO CONTRACT AWARD, THE CONTRACTOR SHALL CERTIFY TO THE GOVERNMENT IN WRITING FULL COMPLIANCE WITH MANUALS, SPECIFICATIONS, AND STANDARDS CALLED OUT AND REQUIRED FOR THE MANUFACTURE OF THIS CONTRACTED LANDING GEAR COMPONENT/ASSEMBLY. CONTRACTOR IS RESPONSIBLE TO COMPLETELY SEARCH THESE MANUALS, SPECIFICATIONS, AND STANDARDS AND FULLY UNDERSTAND THE REQUIREMENTS NECESSARY TO MANUFACTURE LANDING GEAR COMPONENTS. ANY QUESTIONS CAN BE FORWARDED TO OO-ALC/LGHLEN.

24. AFTER CONTRACT AWARD, THE SUCCESSFUL BIDDER SHALL PROVIDE A COPY OF THE PROCESSING DOCUMENTATION (ROUTING DOCUMENTS AND PROCESS SPECIFICATIONS) TO LGHLEN FOR FINAL REVIEW BEFORE PRODUCTION BEGINS.

25. THE FORGING SHALL BE PROCURED FROM THE ORIGINAL FORGING SOURCE, USING THE ORIGINAL CERTIFIED FORGING PROCEDURES AND DIES/TOOLING.

A. PRIOR TO CONTRACT AWARD, THE DETAILED PART BIDDER SHALL PROVIDE CERTIFICATION, FROM THE FORGING SOURCE, TO THE GOVERNMENT THAT THE CERTIFIED DIES AND PROCEDURES ARE AVAILABLE AND THE FORGING SOURCE HAS AN AGREEMENT WITH THE DETAIL PARTS BIDDER TO PROVIDE FORGINGS FOR THEIR USE IN THE EVENT THEY ARE THE SUCCESSFUL BIDDER.

PREPARED BY	SYMBOL	DATE
CAROL HYER	LGMPM	5 Nov 02

REV:	ENGINEERING DATA REQUIREMENTS CONTINUATION SHEET *(ATTACHMENT "A")*

PART NUMBER	NATIONAL STOCK NUMBER
2007644-103	1620-01-259-0559

B. PRIOR TO PRODUCTION, FORGING LOT QUALIFICATION SHALL BE ACCOMPLISHED AS SPECIFIED ON THE FORGING DRAWING AND SAE AMS-F-7190 FOR STEEL FORGINGS AND SAE AMS-A-22771 FOR ALUMINUM FORGINGS. THE DETAILED PART CONTRACTOR SHALL ASSURE THAT THIS HAS BEEN ACCOMPLISHED BY THE FORGING SOURCE AND SHALL SUBMIT CERTIFIED DOCUMENTATION OF ACCOMPLISHMENT TO THE GOVERNMENT.

26. FORGING SOURCE, CONTROL OF FORGING DIES, AND THE LOCATION OF DIES:

A. FORGING DRAWING: 2007744

B. CONTROL OF DRAWING PROCESS: GOODRICH

C. LOCATION OF FORGING DIES:

W. PAT CROW INC
200 LUXTON STREET
P.O. BOX 1720
FT. WORTH, TX 76101-1720
(817) 536-2861
CAGE: 94790
DIE # 3738

SIFCO IND INC
SIFCO FORGE GROUP
970 E 64TH STR
CLEVELAND, OH 44103
(216) 881-8600
DIE # 10975

KROPP FORGE CO
A DIVISION OF ANADITE, INC
5301 W. ROOSEVELT RD
CHICAGO, IL 60650
(312) 242-1900
DIE # 7860

27. INSTALL BUSHINGS PER THE FOLLOWING IN LIEU OF MM5743:

A. THE BUSHING INSTALLATIONS SHALL BE ACCOMPLISHED IN SUCH A MANNER AS TO AVOID DAMAGE TO THE FINISH ON THE I.D. OF THE HOUSING INTO WHICH THE BUSHING IS INSTALLED, OR THE FINISH OF THE O.D. OF THE BUSHING. FORCED INSTALLATION OF SUB-ZERO INSTALLATIONS, SUCH AS THE USE OF A PRESS OR HAMMER IS NOT PERMITTED, AND IS NOT ACCEPTABLE. A SMALL NON-METALLIC HAMMER MAY BE USED TO TAP THE BUSHING INTO ALIGNMENT WITH THE HOUSING BORE, OR TO SEAT THE BUSHING.

B. PRIOR TO BUSHING INSTALLATION, THE PARTS AND HOUSING BORE SHALL BE CLEANED WITH A CLEANING SOLVENT TO REMOVE ALL CONTAMINATION.

C. LIQUID NITROGEN SHALL BE USED FOR ALL SUB-ZERO INSTALLATIONS UNLESS SOME OTHER SUB-ZERO COOLANT IS SPECIFIED, AND APPROVED BY OO-ALC/LILEC ENGINEERING. THE SOAK TIME OF THE BUSHING IN THE LIQUID NITROGEN SHALL BE SUFFICIENT TO ALLOW THE BUSHING TO REACH THE SAME TEMPERATURE AS THE COOLANT.

PREPARED BY	SYMBOL	DATE
CAROL HYER	LGMPM	5 Nov 02

REV:	ENGINEERING DATA REQUIREMENTS CONTINUATION SHEET *(ATTACHMENT "A")*

PART NUMBER	NATIONAL STOCK NUMBER
2007644-103	1620-01-259-0559

D. THE BUSHING SHALL BE INSTALLED INTO THE HOUSING IMMEDIATELY UPON REMOVAL FROM THE COOLANT WITH AN ABSOLUTE MINIMUM OF LOST TIME. TRIAL RUNS SHALL BE ACCOMPLISHED AS NECESSARY TO MINIMIZE INSTALLATION TIME WHICH SHOULD BE IN THE ORDER OF ABOUT SEVEN (7) SECONDS MAXIMUM.

E. IT MAY OCCASIONALLY BE NECESSARY TO HEAT THE HOUSING INTO WHICH THE BUSHING IS TO BE INSTALLED, IN ADDITION TO SUB-ZERO COOLING OF THE BUSHING. DETAIL PARTS IN PROCESS WILL NOT HAVE PAINT OR SEALANT OR OTHER ORGANIC MATERIAL APPLIED PRIOR TO HEATING, THE PARTS SHALL BE HEATED BY THE USE OF RADIANT HEAT TECHNIQUES, SUCH AS THERMAL BLANKETS, INFRARED LAMPS ETC.; TO THE MAXIMUM TEMPERATURE OF 250 F. TEMPERATURE MEASURING DEVICES SHALL BE USED TO MONITOR HEAT AND SHALL BE LOCATED ON AREAS OF THE PART EXPECTED TO REACH MAXIMUM TEMPERATURE. NO SCALING, OXIDATION, OR CORROSION SHALL BE PERMITTED.

F. BUSHINGS WITHOUT FLANGES SHALL BE INSTALLED INTO HOUSING BORE WHICH HAS RECEIVED A LIGHT COAT OF SEALANT PER MIL-PRF-81733. INSTALL SHRUNKEN BUSHING AND WIPE OFF ANY EXCESS SEALANT THAT MAY HAVE EXTRUDED AROUND THE PERIPHERY OF BOTH ENDS OF THE BUSHINGS.

G. BUSHINGS WITH FLANGES SHALL BE INSTALLED IN A SIMILAR MANNER AS PARAGRAPH (F) EXCEPT SEALANT SHALL ALSO BE APPLIED TO FACE OF LUG UNDER FLANGE. SEALANT SHALL BE APPLIED IN SUCH A MANNER AS TO ENSURE COMPLETE COVERAGE OF INSIDE FACE OF BUSHING FLANGE WHEN BUSHING IS INSTALLED. WIPE OFF ANY EXCESS SEALANT AROUND PERIPHERY OF BUSHING FLANGE. WIPE ANY EXCESS SEALANT FROM OTHER END OF BUSHING ALSO.

H. FOR BUSHINGS WITH EXTERNAL GREASE GROOVES THE INSIDE OF THE LUG WILL BE COATED WITH MIL-C-16173 PRIOR TO BUSHING INSTALLATION AND FACE OF LUG WILL BE COATED WITH MIL-PRF-81733 PER PARAGRAPH G, IF BUSHING IS FLANGED.

PREPARED BY	SYMBOL	DATE
CAROL HYER	LGMPM	5 Nov 02

SOURCE QUALIFICATION REQUIREMENTS
(PL98-525, SECTION 2319)

STOCK NR (NSN)1620-01-259-0559
NOUN: Cylinder Assy

PART NUMBER (P/N)2007644-103
AIRCRAFT:F-16

SECTION C

QUALIFICATION REQUIREMENTS THAT MUST BE SATISFIED TO BECOME A QUALIFIED SOURCE:

1. Because of the need for uninterrupted item support to military aircraft systems while keeping with the requirements of PL 98-525, the current acquisition need not and generally will not be delayed to provide an offeror an opportunity to qualify. Normal acquisition practices at OO-ALC should preclude the denial of opportunity to any interested offeror.

2. The offeror must provide a pre-contract award qualification article, which meets the requirements of the engineering drawings, material specifications, and process specifications. However, successful completion of the qualification testing does not guarantee any contract award. If the offeror is deemed qualified and awarded the contract, a post-contract award first ariticle exhibit may be required to verify production capability.

3. The qualification article will be subjected to form, fit, and function verification as well as required testing to assure compliance with data list and other applicable procurement criteria. The qualification article shall demonstrate full compatibility and comparability with existing parts.

4. The required materials will be procured from a qualified source and shall meet the requirements of their respective specifications. The offeror will assure that the supplier has accomplished this and shall submit certified documentation of accomplishment of the above requirements to the purchaser along with the pre-contract award qualification article.

5. The required forgings shall be procured from the qualified forging source using the original certified forging procedures and dies. Forging material and lot qualifications shall be accomplished as required in the specified forging drawing, P/N 2007644-103 and specification MIL-F-7190. The offeror shall assure that this is or has been accomplished by the forging source and will submit certified documentation of accomplishment of the above requirements to the government along with the pre-contract award qualification article.

6. The qualification article once submitted will become subject to such testing as deemed necessary by the U.S. Government to prove that the article meets all dimensional, processing and functional requirements. Such testing may result in the destruction of the article. Following completion of necessary testing and evaluation, the article no matter what its condition shall be returned to the contractor or disposed of at his discretion and direction whether it was found acceptable or not.

7. Form verification: The U.S. Government's Quality Verification Center (QVC) will be used to insure compliance with the dimensional requirements of the article. Material and processing compliance will also be verified as required.

8. Fit/function verification: Existing components and government test stands and fixtures will be utilized to verify physical interface and functional performance of articles.

9. Testing for material and process compliance.

(a) Material analysis
(b) Heat treat
(c) Grinding
(d) Plating
(e) Finish
(f) Grain flow
(g) Other

SOURCE QUALIFICATION REQUIREMENTS
(PL98-525, SECTION 2319)

STOCK NR (NSN)1620-01-259-0559 PART NUMBER (P/N)2007644-103
NOUN: Cylinder Assy AIRCRAFT:F-16

10. Remarks:

a. Organic verification capabilities exist at OO-ALC.

b. Testing requirements outside organic capabilities will be contracted out.

11. The estimated cost of government testing and evaluation is $2000.00.

12. Maximum time for testing of the qualification article will not exceed 30 days from receipt at testing agency.

SECTION D

QUALIFICATION WAIVER REQUIREMENTS.

1. An offerer who has had previous experience in the manufacture and qualification of items, which can be correlated with this product, may apply to the design control authority at OO-ALC for a waiver of the above stated qualification requirements.

a. The qualification waiver criteria utilized by the design control authority to perform a qualification analysis are available upon request. The qualification waiver criteria may be used as a guide in preparing the offerer's written input to the design control authority.

b. The burden of proof for written inputs is on the offerer. The design control authority will not pursue authenticity verification of claims made by the offerer of product manufacturing experience with other Government or non-Government agencies. Unsubstantiated claims will not be considered in the waiver analysis process.

c. This waiver will be granted if and only if the design control authority (LILE) can establish the qualifications of the offerer through the evaluation of written inputs from the offerer or from previous knowledge of the offerer's capabilities or from previous experience with the offerer on similar item acquisitions. If there is any doubt about the offerer's capability, the offerer will be required to submit a pre-qualification article. There is no guarantee of qualification by similarity. LILE reserves the right to require a pre-qualification article of all offerers.

2. The current acquisition need not and will not be delayed in order to provide an offerer with an opportunity to meet the requirements for qualification waiver.

3. Maximum time for approval of qualification by similarity will not exceed 15 days.

REVISION: *02*

ENGINEERING DATA LIST

* HISTORY *

DATE :	DATA TECH :	ORGN SYMBOL :	PR NR :	APPLICATION:	PAGE
10MAR03	SCH	LGMPM		F-16	1 OF 1

CAGE:	MANUFACTURER NAME:	REFERENCE NR:	NOUN :	NSN :
13002	GOODRICH	2007106-103	OUTER SHOCK STRUT, PISTON ASSY	1620012531350

CAGE	DRAWING NUMBER	REV	NR SHEETS	NR CARDS	FURN CODE	DIST CODE	NOUN	REQUIREMENTS
39661	MM4990 /		0000	0000	S		HEAT TREAT SPECIFICATION	
39661	MM5542 /		0000	0000	S		CADMIUM PLATE SPECIFICATION	
98747	OO-ALC FORM 462 /		0004	0000	S		ENGR DATA RQMTS (ATTACH A)	
17576	2006404-263 /	H	0001	0000	S		BUSHING SLEEVE - LANDING GEAR	
17576	2007106 /	D	0001	0000	S		PISTON ASSY, OUTER - SHOCK STR	
	/005202							ECD
17576	2007256 /		0001	0000	S		PISTON, OUTER - MLG FORGING OF	
17576	2007404-41 /	B	0001	0000	S		BUSHING, SLEEVE - LANDING GEAR	
	/98C0291							ECO

STANDARD ENGINEERING TEXT

ENGINEERING DATA LIST REMARKS

FURNISHED METHOD CODE LEGEND:

C - CLASSIFIED DOCUMENT.
S - FURNISHED WITH SOLICITATION.
M - STABLE BASE DRAWING REQUIRED; FURNISHED WITH CONTRACT AWARD.
X - DATA SUPPLIED (NOT IN EDCARS).
R - FURNISHED BY PCD UPON REQUEST.
P - PARTIAL DOCUMENT FURNISHED.
V - VENDOR DRAWING; (NOT PROVIDED).
G - GOV'T DOCUMENT.
O - OTHERS, CONTRACTOR MUST ACQUIRE.
A - DATA NOT AVAILABLE.

REV:	**ENGINEERING DATA REQUIREMENTS** *(ATTACHMENT "A")*

NOTE: MILITARY SPECIFICATIONS I/STANDARDS WILL NOT BE FURNISHED IN THE BID SET.

1. THE FOLLOWING INSTRUCTIONS ARE FURNISHED FOR THE MANUFACTURE OF

PISTON ASSY, OUTER - SHOCK STRUT, MLG

2. PART NUMBER	3. NATIONAL STOCK NUMBER
2007106-103	1620-01-253-1350

4. THE FOLLOWING SPECIFICATIONS/STANDARDS, ETC., WILL BE USED IN LIEU OF THE DATA INDICATED. THE SUPERSEDED DATA WILL NOT BE FURNISHED UNLESS SO INDICATED.

5. PER FLAG NOTE 1, DRAWING 2007106 AND FLAG NOTE 4, DRAWING 2007256 USE SAE AMS 6257 IN LIEU OF MIL-S-8844.

6. HEAT TREAT PER SAE AMS-H-6875, MM4990 IN LIEU OF MIL-H-6875.

7. FOR PARTS HEAT-TREATED TO 180 KSI AND ABOVE, ANY SURFACE GROUND/MACHINED AFTER HEAT TREAT, SHALL BE INSPECTED FOR ABUSIVE GRINDING/MACHINING BURNS PER MIL-STD-865. GRINDING SHALL BE PER MIL-STD-866 IN LIEU OF MM5759.

8. PERFORM MAGNETIC PARTICLE INSPECTION PER ASTM E 1444 IN LIEU OF MIL-I-6868. USE FULL WAVE DIRECT CURRENT (FWDC), WET CONTINUOUS METHOD, FLUORESCENT TYPE WITH THE FOLLOWING ACCEPTANCE/REJECTION CRITERIA: **NO DEFECTS ALLOWED**. THE INTENT OF NO DEFECTS ALLOWED IS THAT THE INSPECTION IS CONDUCTED AT THE REQUIRED SENSITIVITY LEVEL AND THERE SHALL BE NO INDICATIONS ALLOWED. THE INSPECTOR PERFORMING THE INSPECTION SHALL BE CERTIFIED TO LEVEL II WITH THE INSPECTION PROCEDURE DEVELOPED BY A LEVEL III AS SPECIFIED IN AIA/NAS NAS-410.

9. SHOT PEEN PER SAE AMS-S-13165 IN LIEU OF MIL-S-13165.

10. SPECIFICATION MM4951 CADMIUM PLATING WILL NOT BE FURNISHED AS IT IS LIMITED (PROPRIETARY) DATA. AS AN ALTERNATE USE SPECIFICATION MM5542, CADMIUM PLATING. (PROVIDED)

11. DIMENSIONING AND TOLERANCING PER ASME Y14.5 IN LIEU OF ANSI Y14.5.

12. SERIAL NUMBER SHALL BE VIBROPEENED (WITH VIBRATING PNEUMATIC PENCIL), IN 0.09" LETTERS 0.004" - 0.007" DEEP IN THE LOCATION INDICATED. IF THE DRAWING DOES NOT INDICATE A LOCATION, OO-ALC/LGHLEN SHALL PROVIDE S/N LOCATION INSTRUCTIONS. SERIALIZATION OF ITEM SHALL BE ACCOMPLISHED AS FOLLOWS: THE SERIALIZATION SHALL BEGIN WITH THE CAGE OF THE CONTRACTOR NAMED ON THE CONTRACT, FOLLOWED BY A DASH AND THE 2 DIGIT YEAR OF MANUFACTURE, FOLLOWED BY A DASH AND A SEQUENTIALLY UNIQUE 3 DIGIT NUMBER. A CONTRACTOR WHO RECEIVES NUMEROUS INTERMITTENT CONTRACTS SHALL START SERIALIZATION OF ITEM WITH THE NEXT NUMBER IN SEQUENCE OF THE PRIOR CONTRACT. IF A CONTRACT PRODUCES MORE THAN 999 ITEMS, THE SERIAL NUMBER SHOULD BEGIN USING 4 DIGIT SERIAL NUMBERS. THE SERIAL NUMBER SHOULD APPEAR LIKE THIS: "S/N 98747-03-001".

13. CORROSION PROTECTION PER MIL-C-16173 GRADE 1 OR MIL-C-11796 CLASS 1 OR 2 IN LIEU OF MM5752.

14. IDENTIFICATION AND MARKING PER MIL-STD-130 IN LIEU OF TM1040.

15. SURFACE TEXTURE PER ASME B46.1 IN LIEU OF ASA B46.1.

16. CHROME PLATE TO DRAWING REQUIREMENTS AND SAE AMS-QQ-C-320 IN LIEU OF QQ-C-320.

PREPARED BY	SYMBOL	DATE
CAROL HYER	LGMPM	24apr03

17. APPLY A THIN UNIFORM COATING OF PRIMER PER MIL-PRF-23377 OR MIL-PRF-85582 (AFTER CADMIUM PLATING) TO ALL BUSHING BORES AND ALLOW TO FULLY CURE PRIOR TO INSTALLATION OF BUSHING (PRIMER SHALL NOT OBSTRUCT GREASE PASSAGES).

18. INSTALL BUSHINGS PER THE FOLLOWING IN LIEU OF MM5743:

A. THE BUSHING INSTALLATIONS SHALL BE ACCOMPLISHED IN SUCH A MANNER AS TO AVOID DAMAGE TO THE FINISH ON THE I.D. OF THE HOUSING INTO WHICH THE BUSHING IS INSTALLED, OR THE FINISH OF THE O.D. OF THE BUSHING. FORCED INSTALLATION OF SUB-ZERO INSTALLATIONS, SUCH AS THE USE OF A PRESS OR HAMMER IS NOT PERMITTED, AND IS NOT ACCEPTABLE. A SMALL NON-METALLIC HAMMER MAY BE USED TO TAP THE BUSHING INTO ALIGNMENT WITH THE HOUSING BORE, OR TO SEAT THE BUSHING.

B. PRIOR TO BUSHING INSTALLATION, THE PARTS AND HOUSING BORE SHALL BE CLEANED WITH A CLEANING SOLVENT TO REMOVE ALL CONTAMINATION.

C. LIQUID NITROGEN SHALL BE USED FOR ALL SUB-ZERO INSTALLATIONS UNLESS SOME OTHER SUB-ZERO COOLANT IS SPECIFIED, AND APPROVED BY OO-ALC/LILEC ENGINEERING. THE SOAK TIME OF THE BUSHING IN THE LIQUID NITROGEN SHALL BE SUFFICIENT TO ALLOW THE BUSHING TO REACH THE SAME TEMPERATURE AS THE COOLANT.

D. THE BUSHING SHALL BE INSTALLED INTO THE HOUSING IMMEDIATELY UPON REMOVAL FROM THE COOLANT WITH AN ABSOLUTE MINIMUM OF LOST TIME. TRIAL RUNS SHALL BE ACCOMPLISHED AS NECESSARY TO MINIMIZE INSTALLATION TIME WHICH SHOULD BE IN THE ORDER OF ABOUT SEVEN (7) SECONDS MAXIMUM.

E. IT MAY OCCASIONALLY BE NECESSARY TO HEAT THE HOUSING INTO WHICH THE BUSHING IS TO BE INSTALLED, IN ADDITION TO SUB-ZERO COOLING OF THE BUSHING. DETAIL PARTS IN PROCESS WILL NOT HAVE PAINT OR SEALANT OR OTHER ORGANIC MATERIAL APPLIED PRIOR TO HEATING, THE PARTS SHALL BE HEATED BY THE USE OF RADIANT HEAT TECHNIQUES, SUCH AS THERMAL BLANKETS, INFRARED LAMPS ETC.; TO THE MAXIMUM TEMPERATURE OF 250 F. TEMPERATURE MEASURING DEVICES SHALL BE USED TO MONITOR HEAT AND SHALL BE LOCATED ON AREAS OF THE PART EXPECTED TO REACH MAXIMUM TEMPERATURE. NO SCALING, OXIDATION, OR CORROSION SHALL BE PERMITTED.

F. BUSHINGS WITHOUT FLANGES SHALL BE INSTALLED INTO HOUSING BORE WHICH HAS RECEIVED A LIGHT COAT OF SEALANT PER MIL-PRF-81733. INSTALL SHRUNKEN BUSHING AND WIPE OFF ANY EXCESS SEALANT THAT MAY HAVE EXTRUDED AROUND THE PERIPHERY OF BOTH ENDS OF THE BUSHINGS.

G. BUSHINGS WITH FLANGES SHALL BE INSTALLED IN A SIMILAR MANNER AS PARAGRAPH (F) EXCEPT SEALANT SHALL ALSO BE APPLIED TO FACE OF LUG UNDER FLANGE. SEALANT SHALL BE APPLIED IN SUCH A MANNER AS TO ENSURE COMPLETE COVERAGE OF INSIDE FACE OF BUSHING FLANGE WHEN BUSHING IS INSTALLED. WIPE OFF ANY EXCESS SEALANT AROUND PERIPHERY OF BUSHING FLANGE. WIPE ANY EXCESS SEALANT FROM OTHER END OF BUSHING ALSO.

H. FOR BUSHINGS WITH EXTERNAL GREASE GROOVES THE INSIDE OF THE LUG WILL BE COATED WITH MIL-C-16173 PRIOR TO BUSHING INSTALLATION AND FACE OF LUG WILL BE COATED WITH MIL-PRF-81733 PER PARAGRAPH G, IF BUSHING IS FLANGED.

REV:	ENGINEERING DATA REQUIREMENTS CONTINUATION SHEET *(ATTACHMENT "A")*

PART NUMBER	NATIONAL STOCK NUMBER
2007106-103	1620-01-253-1350

19. PAINT REQUIREMENTS AS FOLLOWS:

A. APPLY ONE COAT EPOXY WATERBORNE PRIMER PER MIL-PRF-85582, TYPE I, CLASS 2. ALTERNATE ONE COAT OF EPOXY POLYAMIDE PRIMER PER MIL-PRF-23377, TYPE I IN LIEU OF MIL-P-23377.

B. APPLY TWO TOPCOATS POLYURETHANE PER MIL-PRF-85285, TYPE I, COLOR NUMBER 17925 (WHITE) PE FED-STD-595 IN LIEU OF MIL-C-83286.

20. PERFORM FLUORESCENT PENETRANT INSPECTION PER ASTM E1417, TYPE I, METHOD B OR C, LEVEL 3 OR 4, IN LIEU OF MIL-I-6866, WITH THE FOLLOWING ACCEPTANCE/REJECTION CRITERIA: **NO DEFECTS ALLOWED**. THE INTENT OF NO DEFECTS ALLOWED IS THAT THE INSPECTION IS CONDUCTED AT THE REQUIRED SENSITIVITY LEVEL AND THERE SHALL BE NO INDICATIONS ALLOWED. THE INSPECTOR PERFORMING THE INSPECTION SHALL BE CERTIFIED TO LEVEL II WITH THE INSPECTION PROCEDURE DEVELOPED BY A LEVEL III AS SPECIFIED IN AIA/NAS NAS-410.

21. CADMIUM PLATE TO DRAWING REQUIREMENTS AND SAE AMS-QQ-P-416 IN LIEU OF QQ-P-416.

22. PER DRAWING 2006404-263 USE MATERIAL SAE AMS 4640 IN LIEU OF AMS 4640.

23. CLEANLINESS PER SAE AMS 2300 IN LIEU OF AMS 2300.

24. OO-ALC/LGHLEN SYSTEM ENGINEERING RETAINS ALL RIGHTS TO REVIEW AND ACCEPT MATERIAL REVIEW BOARD (MRB'S) DISPOSITIONS PRIOR TO SHIPMENT OF DISCREPANT ITEM. ALL DEVIATIONS, MINOR AND MAJOR, FROM THE ENGINEERING DRAWING PACKAGE SHALL BE SUBMITTED FOR MRB DISPOSITION.

25. PRIOR TO CONTRACT AWARD, THE CONTRACTOR SHALL CERTIFY TO THE GOVERNMENT IN WRITING FULL COMPLIANCE WITH MANUALS, SPECIFICATIONS, AND STANDARDS CALLED OUT AND REQUIRED FOR THE MANUFACTURE OF THIS CONTRACTED LANDING GEAR COMPONENT/ASSEMBLY. CONTRACTOR IS RESPONSIBLE TO COMPLETELY SEARCH THESE MANUALS, SPECIFICATIONS, AND STANDARDS AND FULLY UNDERSTAND THE REQUIREMENTS NECESSARY TO MANUFACTURE LANDING GEAR COMPONENTS. ANY QUESTIONS CAN BE FORWARDED TO OO-ALC/LGHLEN.

26. THE REQUIRED FORGING WILL BE PROCURED FROM THE QUALIFIED FORGING SOURCE USING THE ORIGINAL CERTIFIED FORGING PROCEDURES AND DIES/TOOLING.

A. PRIOR TO CONTRACT AWARD, THE DETAILED PART BIDDER SHALL PROVIDE CERTIFICATION, FROM THE FORGING SOURCE, TO THE GOVERNMENT THAT THE CERTIFIED DIES AND PROCEDURES ARE AVAILABLE AND THE FORGING SOURCE HAS AN AGREEMENT WITH THE DETAIL PART BIDDER TO PROVIDE FORGINGS FOR THEIR USE IN THE EVENT THEY ARE THE SUCCESSFUL BIDDER.

B. PRIOR TO PRODUCTION, FORGING LOT QUALIFICATION SHALL BE ACCOMPLISHED AS SPECIFIED ON THE FORGING DRAWING AND SAE AMS-F-7190 FOR STEEL FORGINGS AND SAE AMS-A-22771 FOR ALUMINUM FORGINGS. THE DETAILED PART CONTRACTOR SHALL ASSURE THAT THIS HAS BEEN ACCOMPLISHED BY THE FORGING SOURCE AND SHALL SUBMIT CERTIFIED DOCUMENTATION OF ACCOMPLISHMENT TO THE GOVERNMENT.

PREPARED BY	SYMBOL	DATE
CAROL HYER	LGMPM	24 apr 03

REV:	ENGINEERING DATA REQUIREMENTS CONTINUATION SHEET *(ATTACHMENT "A")*

PART NUMBER	NATIONAL STOCK NUMBER
2007106-103	1620-01-253-1350

27. FORGING SOURCE, CONTROL AND LOCATION OF DIES:

A. FORGING DRAWING: 2007256-1

B. CONTROL OF FORGING PROCESS: USAF

C. LOCATION OF FORGING DIES:

SIFCO IND., INC.
SIFCO FORGE GROUP
970 EAST 64TH STR
CLEVELAND, OH 44103-1620
PHONE: 216-881-8600
POC: MARILYN IRVINE
DIE # 10823

W. PAT CROW, INC
200 LUXTON STR
P.O. BOX 1720
FT. WORTH, TX 76101-1720
PHONE: 817-536-2861 X280
POC: LAURA RIVERA
DIE # 3735

PREPARED BY	SYMBOL	DATE
CAROL HYER	LGMPM	24 Apr 03

SOURCE QUALIFICATION REQUIREMENTS
(PL98-525, SECTION 2319)

STOCK NR (NSN)1620-01-253-1350
NOUN: Outer Shock Strut - Piston Assy

PART NUMBER (P/N)2007106-103
AIRCRAFT:F-16

SECTION C

QUALIFICATION REQUIREMENTS THAT MUST BE SATISFIED TO BECOME A QUALIFIED SOURCE:

1. Because of the need for uninterrupted item support to military aircraft systems while keeping with the requirements of PL 98-525, the current acquisition need not and generally will not be delayed to provide an offeror an opportunity to qualify. Normal acquisition practices at OO-ALC should preclude the denial of opportunity to any interested offeror.

2. The offeror must provide a pre-contract award qualification article, which meets the requirements of the engineering drawings, material specifications, and process specifications. However, successful completion of the qualification testing does not guarantee any contract award. If the offeror is deemed qualified and awarded the contract, a post-contract award first ariticle exhibit may be required to verify production capability.

3. The qualification article will be subjected to form, fit, and function verification as well as required testing to assure compliance with data list and other applicable procurement criteria. The qualification article shall demonstrate full compatibility and comparability with existing parts.

4. The required materials will be procured from a qualified source and shall meet the requirements of their respective specifications. The offeror will assure that the supplier has accomplished this and shall submit certified documentation of accomplishment of the above requirements to the purchaser along with the pre-contract award qualification article.

5. The required forgings shall be procured from the qualified forging source using the original certified forging procedures and dies. Forging material and lot qualifications shall be accomplished as required in the specified forging drawing, P/N 2007106-103 and specification MIL-F-7190. The offeror shall assure that this is or has been accomplished by the forging source and will submit certified documentation of accomplishment of the above requirements to the government along with the pre-contract award qualification article.

6. The qualification article once submitted will become subject to such testing as deemed necessary by the U.S. Government to prove that the article meets all dimensional, processing and functional requirements. Such testing may result in the destruction of the article. Following completion of necessary testing and evaluation, the article no matter what its condition shall be returned to the contractor or disposed of at his discretion and direction whether it was found acceptable or not.

7. Form verification: The U.S. Government's Quality Verification Center (QVC) will be used to insure compliance with the dimensional requirements of the article. Material and processing compliance will also be verified as required.

8. Fit/function verification: Existing components and government test stands and fixtures will be utilized to verify physical interface and functional performance of articles.

9. Testing for material and process compliance.

(a) Material analysis
(b) Heat treat
(c) Grinding
(d) Plating
(e) Finish
(f) Grain flow
(g) Other

SOURCE QUALIFICATION REQUIREMENTS
(PL98-525, SECTION 2319)

STOCK NR (NSN)1620-01-253-1350
NOUN: Outer Shock Strut - Piston Assy

PART NUMBER (P/N)2007106-103
AIRCRAFT:F-16

10. Remarks:

a. Organic verification capabilities exist at OO-ALC.

b. Testing requirements outside organic capabilities will be contracted out.

11. The estimated cost of government testing and evaluation is $2000.00.

12. Maximum time for testing of the qualification article will not exceed 30 days from receipt at testing agency.

SECTION D

QUALIFICATION WAIVER REQUIREMENTS.

1. An offerer who has had previous experience in the manufacture and qualification of items, which can be correlated with this product, may apply to the design control authority at OO-ALC for a waiver of the above stated qualification requirements.

a. The qualification waiver criteria utilized by the design control authority to perform a qualification analysis are available upon request. The qualification waiver criteria may be used as a guide in preparing the offerer's written input to the design control authority.

b. The burden of proof for written inputs is on the offerer. The design control authority will not pursue authenticity verification of claims made by the offerer of product manufacturing experience with other Government or non-Government agencies. Unsubstantiated claims will not be considered in the waiver analysis process.

c. This waiver will be granted if and only if the design control authority (LGHLEN) can establish the qualifications of the offerer through the evaluation of written inputs from the offerer or from previous knowledge of the offerer's capabilities or from previous experience with the offerer on similar item acquisitions. If there is any doubt about the offerer's capability, the offerer will be required to submit a pre-qualification article. There is no guarantee of qualification by similarity. LGHLEN reserves the right to require a pre-qualification article of all offerers.

2. The current acquisition need not and will not be delayed in order to provide an offerer with an opportunity to meet the requirements for qualification waiver.

3. Maximum time for approval of qualification by similarity will not exceed 15 days.

REVISION: *01*

ENGINEERING DATA LIST

* HISTORY *

DATE : 06MAR03	DATA TECH : SCH	ORGN SYMBOL : LGMPM	PR NR :	APPLICATION: F-16 H/W	PAGE 1 OF 1

CAGE: 13002	MANUFACTURER NAME: GOODRICH	REFERENCE NR: 2007101-103	NOUN : PISTON, LANDING GEAR	NSN : 1620012523344

CAGE	DRAWING NUMBER	REV	NR SHEETS	NR CARDS	FURN CODE	DIST CODE	NOUN	REQUIREMENTS
39661	MMD10009 /		0000	0000	S		SWAGING SPECIFICATION	
39661	MM4990 /		0000	0000	S		HEAT TREAT SPECIFICATION	
39661	MM5542 /		0000	0000	S		CADMIUM PLATING SPECIFCATION	
39661	MM5743 /		0000	0000	S		INSTALLATION OF BEARINGS SPEC	
17576	MM5752 /		0000	0000	S		CORROSION PROTECTION SPEC	
39661	MM5754 /		0000	0000	S		SWAGING SPECIFICATION	
17576	MM5759 /		0000	0000	S		GRIND SPECIFICATION	
98747	OO-ALC FORM 462 /		0002	0000	S		ENGR DATA RQMTS (ATTACH A)	
17576	TM1040 /		0000	0000	S		IDENTIFY & MARKING SPEC	
17576	2007101 /	E	0001	0000	S		PISTON ASSY, INNER - MLG SCK STR	
17576	2007102 /	D	0001	0000	S		BEARING, SPHERICAL - SHOCK STRUT	
17576	2007251 /		0001	0000	S		PISTON, INNER - MLG FORGING OF	

STANDARD ENGINEERING TEXT

ENGINEERING DATA LIST REMARKS

FURNISHED METHOD CODE LEGEND:

C - CLASSIFIED DOCUMENT.
S - FURNISHED WITH SOLICITATION.
M - STABLE BASE DRAWING REQUIRED; FURNISHED WITH CONTRACT AWARD
X - DATA SUPPLIED (NOT IN EDCARS).
R - FURNISHED BY PCD UPON REQUEST.
P - PARTIAL DOCUMENT FURNISHED.
V - VENDOR DRAWING; (NOT PROVIDED)
G - GOV'T DOCUMENT.
O - OTHERS, CONTRACTOR MUST ACQUIRE.
A - DATA NOT AVAILABLE

REV:	**ENGINEERING DATA REQUIREMENTS** *(ATTACHMENT "A")*

NOTE: MILITARY SPECIFICATIONS I/STANDARDS WILL NOT BE FURNISHED IN THE BID SET.

1. THE FOLLOWING INSTRUCTIONS ARE FURNISHED FOR THE MANUFACTURE OF

PISTON ASSY, INNER - MLG SHOCK STRUT

2. PART NUMBER	3. NATIONAL STOCK NUMBER
2007101-103	1620-01-252-3344

4. THE FOLLOWING SPECIFICATIONS/STANDARDS, ETC., WILL BE USED IN LIEU OF THE DATA INDICATED. THE SUPERSEDED DATA WILL NOT BE FURNISHED UNLESS SO INDICATED.

5. PER DRAWING 2007101 AND 2007251,USE MATERIAL AMS 6414, AMS 6257 IN LIEU OF MIL-S-8844.

6. HEAT TREAT PER SAE AMS-H-6875 IN LIEU OF MIL-H-6875.

7. FOR PARTS HEAT TREATED TO 180 KSI AND ABOVE, ANY SURFACE GROUND/MACHINED AFTER HEAT TREAT, SHALL BE INSPECTED FOR ABUSIVE GRINDING/MACHINING BURNS PER MIL-STD-867. GRINDING SHALL BE PER MIL-STD-866 OR MM5759.

8. SHOT PEEN PER SAE AMS-S-13165 IN LIEU OF MIL-S-13165.

9. SPECIFICATION MM4951 CADMIUM PLATING WILL NOT BE FURNISHED AS IT IS LIMITED (PROPRIETARY) DATA. AS AN ALTERNATE USE SPEC MM5542, CADMIUM PLATING. (PROVIDED)

10. SERIALIZATION OF ITEM SHALL BE ACCOMPLISHED AS FOLLOWS: THE SERIALIZATION WILL BEGIN WITH THE CAGE OF THE CONTRACTOR NAMED ON THE CONTRACT, FOLLOWED BY A DASH AND THE 2 DIGIT YEAR OF MANUFACTURE, FOLLOWED BY A DASH AND A SEQUENTIALLY UNIQUE 3 DIGIT NUMBER. A CONTRACTOR WHO RECEIVES NUMEROUS INTERMITTENT CONTRACTS WILL START SERIALIZATION OF ITEM WITH THE NEXT NUMBER IN SEQUENCE OF THE PRIOR CONTRACT. IF A CONTRACT PRODUCES MORE THAN 999 ITEMS, THE SERIAL NUMBER SHOULD BEGIN USING 4 DIGIT SERIAL NUMBERS. THE SERIAL NUMBER SHOULD APPEAR LIKE THIS: "S/N 98747-03-001".

11. PERFORM MAGNETIC PARTICLE INSPECTION PER ASTM E 1444, IN LIEU OF MIL-I-6868. USE FULL WAVE DIRECT CURRENT (FWDC), AND WET CONTINUOUS METHOD, FLUORESCENT TYPE WITH THE FOLLOWING ACCEPTANCE/REJECTION CRITERIA: **NO DEFECTS ALLOWED**. THE INTENT OF NO DEFECTS ALLOWED IS THAT THE INSPECTION IS CONDUCTED AT THE REQUIRED SENSITIVITY LEVEL AND THERE SHALL BE NO INDICATIONS ALLOWED. THE INSPECTOR PERFORMING THE INSPECTION SHALL BE CERTIFIED TO LEVEL II WITH THE INSPECTION PROCEDURE DEVELOPED BY A LEVEL III AS SPECIFIED IN AIA/NAS NAS-410.

12. PAINT ALL SURFACES EXCEPT AS NOTED ON DRAWING, PER THE FOLLOWING:

A. APPLY ONE COAT EPOXY WATERBORNE PRIMER PER MIL-PRF-85582, TYPE I, CLASS 2. ALTERNATE ONE COAT OF EPOXY POLYAMIDE PRIMER PER MIL-PRF-23377, TYPE I IN LIEU OF MIL-P-23377.

B. APPLY TWO TOPCOATS POLYURETHANE PER MIL-PRF-85285, TYPE I, COLOR #17925 (WHITE) PER FED-STD-595 IN LIEU OF MIL-C-83286.

13. CORROSION PROTECTION PER MIL-C-16173 GRADE 1, MIL-C-11796 CLASS 1 OR 2 OR MM5752.

14. IDENTIFICATION AND MARKING PER MIL-STD-130 OR TM1040.

15. PER DRAWING 2007102,USE MATERIAL ASTM B196 IN LIEU OF QQ-C-530.

16. DIMENSIONS AND TOLERANCING PER ASME Y14.5 IN LIEU OF ANSI Y14.5.

PREPARED BY	SYMBOL	DATE
CAROL HYER	LGMPM	18 Mar 03

REV:	ENGINEERING DATA REQUIREMENTS CONTINUATION SHEET *(ATTACHMENT "A")*

PART NUMBER	NATIONAL STOCK NUMBER
2007101-103	1620-01-252-3344

17. SURFACE TEXTURE PER ASME B46.1 IN LIEU OF ASA B46.1.

18. PER DRAWING 2007251, CLEANLINESS PER SAE AMS 2300 IN LIEU OF AMS 2300.

19. CHROME PLATE TO DRAWING REQUIREMENTS AND SAE AMS-QQ-C-320 IN LIEU OF QQ-C-320.

20. PERFORM FLUORESCENT PENETRANT INSPECTION PER ASTM E 1417, TYPE I, METHOD B OR C, LEVEL 3 OR 4 IN LIEU OF MIL-I-6866, WITH THE FOLLOWING ACCEPTANCE/REJECTION CRITERIA: **NO DEFECTS ALLOWED**. THE INTENT OF NO DEFECTS ALLOWED IS THAT THE INSPECTION IS CONDUCTED AT THE REQUIRED SENSITIVITY LEVEL AND THERE SHALL BE NO INDICATIONS ALLOWED. THE INSPECTOR PERFORMING THE INSPECTION SHALL BE CERTIFIED TO LEVEL II WITH THE INSPECTION PROCEDURE DEVELOPED BY A LEVEL III AS SPECIFIED IN AIA/NAS NAS-410.

21. THE REQUIRED FORGING WILL BE PROCURED FROM THE QUALIFIED FORGING SOURCE USING THE ORIGINAL CERTIFIED FORGING PROCEDURES AND DIES/TOOLING.

A. PRIOR TO CONTRACT AWARD THE DETAIL PART BIDDER WILL PROVIDE CERTIFICATION, FROM THE FORGING SOURCE, TO THE GOVERNMENT THAT THE CERTIFIED DIES AND FORGING PROCEDURES ARE AVAILABLE AND THAT THE FORGING SOURCE HAS AN AGREEMENT WITH THE DETAIL PART BIDDER TO PROVIDE FORGINGS FOR THEIR USE IN THE EVENT THEY ARE THE SUCCESSFUL BIDDER.

B. PRIOR TO PRODUCTION, FORGING LOT QUALIFICATION WILL BE ACCOMPLISHED AS SPECIFIED ON THE FORGING DRAWING AND MIL-F-7190. THE CONTRACTOR WILL ASSURE THAT THIS IS OR HAS BEEN ACCOMPLISHED BY THE FORGING SOURCE AND WILL SUBMIT CERTIFIED DOCUMENTATION OF ACCOMPLISHMENT TO THE GOVERNMENT.

22. FORGING SOURCE, CONTROL AND LOCATION OF DIES:

A. FORGING DRAWING: 2007251-1

B. CONTROL OF FORGING PROCESS: UNKNOWN

C. LOCATION OF FORGING DIES:

CANTON DROP FORGE
4575 SOUTHWAY ST. SW
P.O. BOX 6902
CANTON, OH 44706-0902
POC: JOHN MOTSAY
330-477-4511
DIE # 6422

W. PAT CROW FORGINGS, INC
P.O. BOX 1720
FORT WORTH, TX 76101-1720
817-536-2861
POC: HELEN BILLINGS
DIE # 3729

PREPARED BY	SYMBOL	DATE
CAROL HYER	LGMPM	18 Mar 03

REV:	ENGINEERING DATA REQUIREMENTS CONTINUATION SHEET *(ATTACHMENT "A")*

PART NUMBER	NATIONAL STOCK NUMBER
2007101-103	1620-01-252-3344

23. OO-ALC/LGHLEN SYSTEM ENGINEERING RETAINS ALL RIGHTS TO REVIEW AND ACCEPT MATERIAL REVIEW BOARD'S (MRB'S) DISPOSITIONS PRIOR TO SHIPMENT OF DISCREPANT ITEM. ALL DEVIATIONS, MINOR AND MAJOR, FROM THE ENGINEERING DRAWING PACKAGE SHALL BE SUBMITTED FOR MRB DISPOSITION.

24. PRIOR TO CONTRACT AWARD, THE CONTRACTOR SHALL CERTIFY TO THE GOVERNMENT IN WRITING FULL COMPLIANCE WITH MANUALS, SPECIFICATIONS, AND STANDARDS CALLED OUT AND REQUIRED FOR THE MANUFACTURE OF THIS CONTRACTED LANDING GEAR COMPONENT/ASSEMBLY. CONTRACTOR IS RESPONSIBLE TO COMPLETELY SEARCH THESE MANUALS, SPECIFICATIONS, AND STANDARDS AND FULLY UNDERSTAND THE REQUIREMENTS NECESSARY TO MANUFACTURE LANDING GEAR COMPONENTS. ANY QUESTIONS CAN BE FORWARDED TO OO-ALC/LGHLEN.

25. AFTER CONTRACT AWARD, THE SUCCESSFUL BIDDER SHALL PROVIDE A COPY OF THE PROCESSING DOCUMENTATION (ROUTING DOCUMENTS AND PROCESS SPECIFICATIONS) TO LGHLEN FOR FINAL REVIEW BEFORE PRODUCTION BEGINS.

PREPARED BY	SYMBOL	DATE
CAROL HYER	LGMPM	18 Mar 03

SOURCE QUALIFICATION REQUIREMENTS
(PL98-525, SECTION 2319)

STOCK NR (NSN)1620-01-252-3344
NOUN: Piston Landing Gear MLG

PART NUMBER (P/N)2007101-103
AIRCRAFT:F-16

SECTION C

QUALIFICATION REQUIREMENTS THAT MUST BE SATISFIED TO BECOME A QUALIFIED SOURCE:

1. Because of the need for uninterrupted item support to military aircraft systems while keeping with the requirements of PL 98-525, the current acquisition need not and generally will not be delayed to provide an offeror an opportunity to qualify. Normal acquisition practices at OO-ALC should preclude the denial of opportunity to any interested offeror.

2. The offeror must provide a pre-contract award qualification article, which meets the requirements of the engineering drawings, material specifications, and process specifications. However, successful completion of the qualification testing does not guarantee any contract award. If the offeror is deemed qualified and awarded the contract, a post-contract award first ariticle exhibit may be required to verify production capability.

3. The qualification article will be subjected to form, fit, and function verification as well as required testing to assure compliance with data list and other applicable procurement criteria. The qualification article shall demonstrate full compatibility and comparability with existing parts.

4. The required materials will be procured from a qualified source and shall meet the requirements of their respective specifications. The offeror will assure that the supplier has accomplished this and shall submit certified documentation of accomplishment of the above requirements to the purchaser along with the pre-contract award qualification article.

5. The required forgings shall be procured from the qualified forging source using the original certified forging procedures and dies. Forging material and lot qualifications shall be accomplished as required in the specified forging drawing, P/N 2007101-103 and specification MIL-F-7190. The offeror shall assure that this is or has been accomplished by the forging source and will submit certified documentation of accomplishment of the above requirements to the government along with the pre-contract award qualification article.

6. The qualification article once submitted will become subject to such testing as deemed necessary by the U.S. Government to prove that the article meets all dimensional, processing and functional requirements. Such testing may result in the destruction of the article. Following completion of necessary testing and evaluation, the article no matter what its condition shall be returned to the contractor or disposed of at his discretion and direction whether it was found acceptable or not.

7. Form verification: The U.S. Government's Quality Verification Center (QVC) will be used to insure compliance with the dimensional requirements of the article. Material and processing compliance will also be verified as required.

8. Fit/function verification: Existing components and government test stands and fixtures will be utilized to verify physical interface and functional performance of articles.

9. Testing for material and process compliance.

(a) Material analysis
(b) Heat treat
(c) Grinding
(d) Plating
(e) Finish
(f) Grain flow
(g) Other

SOURCE QUALIFICATION REQUIREMENTS
(PL98-525, SECTION 2319)

STOCK NR (NSN)1620-01-252-3344
NOUN: Piston Landing Gear MLG

PART NUMBER (P/N)2007101-103
AIRCRAFT:F-16

10. Remarks:

a. Organic verification capabilities exist at OO-ALC.

b. Testing requirements outside organic capabilities will be contracted out.

11. The estimated cost of government testing and evaluation is $1000.00.

12. Maximum time for testing of the qualification article will not exceed 30 days from receipt at testing agency.

SECTION D

QUALIFICATION WAIVER REQUIREMENTS.

1. An offerer who has had previous experience in the manufacture and qualification of items, which can be correlated with this product, may apply to the design control authority at OO-ALC for a waiver of the above stated qualification requirements.

a. The qualification waiver criteria utilized by the design control authority to perform a qualification analysis are available upon request. The qualification waiver criteria may be used as a guide in preparing the offerer's written input to the design control authority.

b. The burden of proof for written inputs is on the offerer. The design control authority will not pursue authenticity verification of claims made by the offerer of product manufacturing experience with other Government or non-Government agencies. Unsubstantiated claims will not be considered in the waiver analysis process.

c. This waiver will be granted if and only if the design control authority (LGHLEN) can establish the qualifications of the offerer through the evaluation of written inputs from the offerer or from previous knowledge of the offerer's capabilities or from previous experience with the offerer on similar item acquisitions. If there is any doubt about the offerer's capability, the offerer will be required to submit a pre-qualification article. There is no guarantee of qualification by similarity. LGHLEN reserves the right to require a pre-qualification article of all offerers.

2. The current acquisition need not and will not be delayed in order to provide an offerer with an opportunity to meet the requirements for qualification waiver.

3. Maximum time for approval of qualification by similarity will not exceed 15 days.

REVISION: *05*

ENGINEERING DATA LIST

* HISTORY *

DATE : 07MAR03	DATA TECH : SCH	ORGN SYMBOL : LGMPM	PR NR :	APPLICATION: F-16	PAGE 1 OF 1

CAGE: 13002	MANUFACTURER NAME: GOODRICH	REFERENCE NR: 2007107-1	NOUN : OUTER CYLINDER ASSY	NSN : 1620012524035

CAGE	DRAWING NUMBER	REV	NR SHEETS	NR CARDS	FURN CODE	DIST CODE	NOUN	REQUIREMENTS
39661	MM4990 /		0000	0000	S		HEAT TREAT SPECIFICATION	
17576	MM5542 /		0000	0000	S		CADMIUM PLATING SPECIFICATION	
98747	OO-ALC FORM 462 /		0003	0000	S		ENGR DATA RQMTS (ATTACH A)	
17576	2007107 /	D	0001	0000	S		CYLINDER, OUTER - SHOCK STRT MLG	
17576	2007207 /		0001	0000	S		CYL, OUTR, SHK STR - MLG, FORG	

STANDARD ENGINEERING TEXT

ENGINEERING DATA LIST REMARKS

FURNISHED METHOD CODE LEGEND:

C - CLASSIFIED DOCUMENT.
S - FURNISHED WITH SOLICITATION.
M - STABLE BASE DRAWING REQUIRED; FURNISHED WITH CONTRACT AWARD.
X - DATA SUPPLIED (NOT IN EDCARS).
R - FURNISHED BY PCD UPON REQUEST.
P - PARTIAL DOCUMENT FURNISHED.
V - VENDOR DRAWING; (NOT PROVIDED).
G - GOV'T DOCUMENT.
O - OTHERS, CONTRACTOR MUST ACQUIRE.
A - DATA NOT AVAILABLE.

REV:	ENGINEERING DATA REQUIREMENTS *(ATTACHMENT "A")*

NOTE: MILITARY SPECIFICATIONS I/STANDARDS WILL NOT BE FURNISHED IN THE BID SET.

1. THE FOLLOWING INSTRUCTIONS ARE FURNISHED FOR THE MANUFACTURE OF

CYLINDER, OUTER SHOCK STRUT, MLG

2. PART NUMBER	3. NATIONAL STOCK NUMBER
2007107-1	1620-01-252-4035

4. THE FOLLOWING SPECIFICATIONS/STANDARDS, ETC., WILL BE USED IN LIEU OF THE DATA INDICATED. THE SUPERSEDED DATA WILL NOT BE FURNISHED UNLESS SO INDICATED.

5. MATERIAL: 300M STEEL PER SAE AMS 6414, SAE AMS 6257 IN LIEU OF MIL-S-8844.

6. HEAT TREAT PER SAE AMS-H-6875 IN LIEU OF MIL-H-6875.

7. ON PARTS HEAT TREATED 180 KSI AND ABOVE, ANY SURFACES GROUND/MACHINED AFTER HEAT TREAT WILL BE INSPECTED FOR BURNS PER MIL-STD-867. GRINDING SHALL BE PER MIL-STD-866 IN LIEU OF MM5759.

8. PERFORM MAGNETIC PARTICLE INSPECTION PER ASTM E 1444 IN LIEU OF MIL-I-6868. USE FULL WAVE DIRECT CURRENT (FWDC), WET CONTINUOUS METHOD, FLUORESCENT TYPE WITH THE FOLLOWING ACCEPTANCE/REJECTION CRITERIA: NO DEFECTS ALLOWED. THE INTENT OF NO DEFECTS ALLOWED IS THAT THE INSPECTION IS CONDUCTED AT THE REQUIRED SENSITIVITY LEVEL AND THERE SHALL BE NO INDICATIONS ALLOWED. THE INSPECTOR PERFORMING THE INSPECTION SHALL BE CERTIFIED TO LEVEL II WITH THE INSPECTION PROCEDURE DEVELOPED BY A LEVEL III AS SPECIFIED IN AIA/NAS NAS-410.

9. SHOT PEEN PER SAE AMS-S-13165 IN LIEU OF MIL-S-13165.

10. CADMIUM PLATE SPECIFICATION MM4951 WILL NOT BE FURNISHED AS IT IS LIMITED (PROPRIETARY) DATA. AS AN ALTERNATE USE SPECIFICATION MM5542. (PROVIDED)

11. DIMENSIONING AND TOLERANCING PER ASME Y14.5 IN LIEU OF ANSI Y14.5.

12. SERIAL NUMBER SHALL BE VIBROPEENED (WITH VIBRATING PNEUMATIC PENCIL), IN 0.09" LETTERS 0.004" - 0.007" DEEP IN THE LOCATION INDICATED. IF THE DRAWING DOES NOT INDICATE A LOCATION, OO-ALC/LGHLEN SHALL PROVIDE S/N LOCATION INSTRUCTIONS. SERIALIZATION OF ITEM SHALL BE ACCOMPLISHED AS FOLLOWS: THE SERIALIZATION SHALL BEGIN WITH THE CAGE OF THE CONTRACTOR NAMED ON THE CONTRACT, FOLLOWED BY A DASH AND THE 2 DIGIT YEAR OF MANUFACTURE, FOLLOWED BY A DASH AND A SEQUENTIALLY UNIQUE 3 DIGIT NUMBER. A CONTRACTOR WHO RECEIVES NUMEROUS INTERMITTENT CONTRACTS SHALL START SERIALIZATION OF ITEM WITH THE NEXT NUMBER IN SEQUENCE OF THE PRIOR CONTRACT. IF A CONTRACT PRODUCES MORE THAN 999 ITEMS, THE SERIAL NUMBER SHOULD BEGIN USING 4 DIGIT SERIAL NUMBERS. THE SERIAL NUMBER SHOULD APPEAR LIKE THIS: "S/N 98747-03-001".

13. CORROSION PROTECTION PER MIL-C-16173 GRADE 1 OR MIL-C-11796 CLASS 1 OR 2 IN LIEU OF MM5752.

14. IDENTIFICATION AND MARKING PER MIL-STD-130 IN LIEU OF TM1040.

15. SURFACE TEXTURE PER ASME B46.1 IN LIEU OF ASA B46.1.

16. CHROME PLATE TO DRAWING REQUIREMENTS AND SAE AMS-QQ-C-320 IN LIEU OF QQ-C-320.

PREPARED BY	SYMBOL	DATE
CAROL HYER	LGMPM	25 Apr 03

REV:	ENGINEERING DATA REQUIREMENTS CONTINUATION SHEET *(ATTACHMENT "A")*

PART NUMBER	NATIONAL STOCK NUMBER
2007107-1	1620-01-252-4035

17. PAINT REQUIREMENTS AS FOLLOWS:

A. APPLY ONE COAT EPOXY WATERBORNE PRIMER PER MIL-PRF-85582, TYPE I, CLASS 2. ALTERNATE ONE COAT OF EPOXY POLYAMIDE PRIMER PER MIL-PRF-23377, TYPE I IN LIEU OF MIL-P-23377.

B. APPLY TWO TOPCOATS POLYURETHANE PER MIL-PRF-85285, TYPE I, COLOR NUMBER 17925 (WHITE) PER FED-STD-595 IN LIEU OF MIL-C-83286.

18. CLEANLINESS PER SAE AMS 2300 IN LIEU OF AMS 2300.

19. OO-ALC/LGHLEN SYSTEM ENGINEERING RETAINS ALL RIGHTS TO REVIEW AND ACCEPT MATERIAL REVIEW BOARD (MRB'S) DISPOSITIONS PRIOR TO SHIPMENT OF DISCREPANT ITEM. ALL DEVIATIONS, MINOR AND MAJOR, FROM THE ENGINEERING DRAWING PACKAGE SHALL BE SUBMITTED FOR MRB DISPOSITION.

20. PRIOR TO CONTRACT AWARD, THE CONTRACTOR SHALL CERTIFY TO THE GOVERNMENT IN WRITING FULL COMPLIANCE WITH MANUALS, SPECIFICATIONS, AND STANDARDS CALLED OUT AND REQUIRED FOR THE MANUFACTURE OF THIS CONTRACTED LANDING GEAR COMPONENT/ASSEMBLY. CONTRACTOR IS RESPONSIBLE TO COMPLETELY SEARCH THESE MANUALS, SPECIFICATIONS, AND STANDARDS AND FULLY UNDERSTAND THE REQUIREMENTS NECESSARY TO MANUFACTURE LANDING GEAR COMPONENTS. ANY QUESTIONS CAN BE FORWARDED TO OO-ALC/LGHLEN.

21. AFTER CONTRACT AWARD, THE SUCCESSFUL BIDDER SHALL PROVIDE A COPY OF THE PROCESSING DOCUMENTATION (ROUTING DOCUMENTS AND PROCESS SPECIFICATIONS) TO LGHLEN FOR FINAL REVIEW BEFORE PRODUCTION BEGINS.

22. THE REQUIRED FORGING WILL BE PROCURED FROM THE QUALIFIED FORGING SOURCE USING THE ORIGINAL CERTIFIED FORGING PROCEDURES AND DIES/TOOLING.

A. PRIOR TO CONTRACT AWARD, THE DETAILED PART BIDDER SHALL PROVIDE CERTIFICATION, FROM THE FORGING SOURCE, TO THE GOVERNMENT THAT THE CERTIFIED DIES AND PROCEDURES ARE AVAILABLE AND THE FORGING SOURCE HAS AN AGREEMENT WITH THE DETAIL PART BIDDER TO PROVIDE FORGINGS FOR THEIR USE IN THE EVENT THEY ARE THE SUCCESSFUL BIDDER.

B. PRIOR TO PRODUCTION, FORGING LOT QUALIFICATION SHALL BE ACCOMPLISHED AS SPECIFIED ON THE FORGING DRAWING AND SAE AMS-F-7190 FOR STEEL FORGINGS AND SAE AMS-A-22771 FOR ALUMINUM FORGINGS. THE DETAILED PART CONTRACTOR SHALL ASSURE THAT THIS HAS BEEN ACCOMPLISHED BY THE FORGING SOURCE AND SHALL SUBMIT CERTIFIED DOCUMENTATION OF ACCOMPLISHMENT TO THE GOVERNMENT.

PREPARED BY	SYMBOL	DATE
CAROL HYER	LGMPM	25 Apr 03

REV:	ENGINEERING DATA REQUIREMENTS CONTINUATION SHEET *(ATTACHMENT "A")*

PART NUMBER	NATIONAL STOCK NUMBER
2007107-1	1620-01-252-4035

23. FORGING SOURCE, CONTROL AND LOCATION OF DIES:

A. FORGING DRAWING: 2007207-1

B. CONTROL OF FORGING PROCESS: USAF

C. LOCATION OF FORGING DIES: .

SIFCO IND., INC
970 E. 64th STR.
CLEVELAND, OH 44103-1620
PHONE: 216-881-8600
POC: MARILYN IRVINE
DIE # 10822

KROPP FORGE
5301 W. ROOSEVELT ROAD
CICERO, IL 60804
PHONE: 708-652-6691
POC: CHUCK MEYER
DIE # 8105

W. PAT CROW, INC
200 LUXTON STR
P.O. BOX 1720
FT. WORTH, TX 76101-1720
PHONE: 817-536-2861 X280
POC: LAURA RIVERA
DIE # 4912

PREPARED BY	SYMBOL	DATE
CAROL HYER	LGMPM	25 Apr 03

SOURCE QUALIFICATION REQUIREMENTS
(PL98-525, SECTION 2319)

STOCK NR (NSN)1620-01-252-4035
NOUN: Cylinder, Outer Shock Strut, MLG

PART NUMBER (P/N)2007107-1
AIRCRAFT:F-16

SECTION C

QUALIFICATION REQUIREMENTS THAT MUST BE SATISFIED TO BECOME A QUALIFIED SOURCE:

1. Because of the need for uninterrupted item support to military aircraft systems while keeping with the requirements of PL 98-525, the current acquisition need not and generally will not be delayed to provide an offeror an opportunity to qualify. Normal acquisition practices at OO-ALC should preclude the denial of opportunity to any interested offeror.

2. The offeror must provide a pre-contract award qualification article, which meets the requirements of the engineering drawings, material specifications, and process specifications. However, successful completion of the qualification testing does not guarantee any contract award. If the offeror is deemed qualified and awarded the contract, a post-contract award first ariticle exhibit may be required to verify production capability.

3. The qualification article will be subjected to form, fit, and function verification as well as required testing to assure compliance with data list and other applicable procurement criteria. The qualification article shall demonstrate full compatibility and comparability with existing parts.

4. The required materials will be procured from a qualified source and shall meet the requirements of their respective specifications. The offeror will assure that the supplier has accomplished this and shall submit certified documentation of accomplishment of the above requirements to the purchaser along with the pre-contract award qualification article.

5. The required forgings shall be procured from the qualified forging source using the original certified forging procedures and dies. Forging material and lot qualifications shall be accomplished as required in the specified forging drawing, P/N 2007107-1 and specification MIL-F-7190. The offeror shall assure that this is or has been accomplished by the forging source and will submit certified documentation of accomplishment of the above requirements to the government along with the pre-contract award qualification article.

6. The qualification article once submitted will become subject to such testing as deemed necessary by the U.S. Government to prove that the article meets all dimensional, processing and functional requirements. Such testing may result in the destruction of the article. Following completion of necessary testing and evaluation, the article no matter what its condition shall be returned to the contractor or disposed of at his discretion and direction whether it was found acceptable or not.

7. Form verification: The U.S. Government's Quality Verification Center (QVC) will be used to insure compliance with the dimensional requirements of the article. Material and processing compliance will also be verified as required.

8. Fit/function verification: Existing components and government test stands and fixtures will be utilized to verify physical interface and functional performance of articles.

9. Testing for material and process compliance.

(a) Material analysis
(b) Heat treat
(c) Grinding
(d) Plating
(e) Finish
(f) Grain flow
(g) Other

SOURCE QUALIFICATION REQUIREMENTS
(PL98-525, SECTION 2319)

STOCK NR (NSN)1620-01-252-4035 PART NUMBER (P/N)2007107-1
NOUN: Cylinder, Outer Shock Strut, MLG AIRCRAFT:F-16

10. Remarks:

a. Organic verification capabilities exist at OO-ALC.

b. Testing requirements outside organic capabilities will be contracted out.

11. The estimated cost of government testing and evaluation is $2000.00.

12. Maximum time for testing of the qualification article will not exceed 30 days from receipt at testing agency.

SECTION D

QUALIFICATION WAIVER REQUIREMENTS.

1. An offerer who has had previous experience in the manufacture and qualification of items, which can be correlated with this product, may apply to the design control authority at OO-ALC for a waiver of the above stated qualification requirements.

a. The qualification waiver criteria utilized by the design control authority to perform a qualification analysis are available upon request. The qualification waiver criteria may be used as a guide in preparing the offerer's written input to the design control authority.

b. The burden of proof for written inputs is on the offerer. The design control authority will not pursue authenticity verification of claims made by the offerer of product manufacturing experience with other Government or non-Government agencies. Unsubstantiated claims will not be considered in the waiver analysis process.

c. This waiver will be granted if and only if the design control authority (LGHLEN) can establish the qualifications of the offerer through the evaluation of written inputs from the offerer or from previous knowledge of the offerer's capabilities or from previous experience with the offerer on similar item acquisitions. If there is any doubt about the offerer's capability, the offerer will be required to submit a pre-qualification article. There is no guarantee of qualification by similarity. LGHLEN reserves the right to require a pre-qualification article of all offerers.

2. The current acquisition need not and will not be delayed in order to provide an offerer with an opportunity to meet the requirements for qualification waiver.

3. Maximum time for approval of qualification by similarity will not exceed 15 days.

REVISION: *06*

ENGINEERING DATA LIST

* HISTORY *

DATE :	DATA TECH :	ORGN SYMBOL :	PR NR :	APPLICATION:	PAGE
17OCT02	SCH	LGMPM		F16	1 OF 1

CAGE:	MANUFACTURER NAME:	REFERENCE NR:	NOUN :	NSN :
13002	GOODRICH	2006106-109	PISTON, LANDING GEAR	1620014420167

CAGE	DRAWING NUMBER	REV	NR SHEETS	NR CARDS	FURN CODE	DIST CODE	NOUN	REQUIREMENTS
98747	OO-ALC FORM 462 /		0003	0000	S		ENGR DATA RQMTS (ATTACH A)	
17576	2006106 /	N	0001	0000	S		PISTON ASSY, OUTER - SHK STR MLG	
	/96C139							ECO
	/E0-N2							ENGINEERING CHANGE DATA
17576	2006256 /	F	0001	0000	S		PISTON, OUTER MLG FORGING OF	
17576	2006404-263 /	H	0001	0000	S		BUSHING SLEEVE - LANDING GEAR	
17576	2006404-265 /	K	0001	0000	S		BUSHING SLEEVE - LANDING GEAR	

STANDARD ENGINEERING TEXT

ENGINEERING DATA LIST REMARKS

FURNISHED METHOD CODE LEGEND:

C - CLASSIFIED DOCUMENT.
S - FURNISHED WITH SOLICITATION.
M - STABLE BASE DRAWING REQUIRED; FURNISHED WITH CONTRACT AWARD.
X - DATA SUPPLIED (NOT IN EDCARS).
R - FURNISHED BY PCD UPON REQUEST.
P - PARTIAL DOCUMENT FURNISHED.
V - VENDOR DRAWING; (NOT PROVIDED)
G - GOV'T DOCUMENT.
O - OTHERS, CONTRACTOR MUST ACQUIRE.
A - DATA NOT AVAILABLE

REV:	ENGINEERING DATA REQUIREMENTS *(ATTACHMENT "A")*

NOTE: MILITARY SPECIFICATIONS I/STANDARDS WILL NOT BE FURNISHED IN THE BID SET.

1. THE FOLLOWING INSTRUCTIONS ARE FURNISHED FOR THE MANUFACTURE OF

PISTON ASSY, OUTER - SHOCK STRUT, MLG

2. PART NUMBER	3. NATIONAL STOCK NUMBER
2006106-109	1620-01-442-0167

4. THE FOLLOWING SPECIFICATIONS/STANDARDS, ETC., WILL BE USED IN LIEU OF THE DATA INDICATED. THE SUPERSEDED DATA WILL NOT BE FURNISHED UNLESS SO INDICATED.

5. MATERIAL REF: 7049-T73 AL ALLOY PER SAE AMS-QQ-A-367 IN LIEU OF QQ-A-367. (REF DWG 2006106)

6. PERFORM FLUORESCENT PENETRANT INSPECTION PER ASTM E 1417, TYPE I, METHOD B OR C, LEVEL 3 OR 4 IN LIEU OF MIL-I-6866, WITH THE FOLLOWING ACCEPTANCE/REJECTION CRITERIA: NO DEFECTS ALLOWED. THE INTENT OF NO DEFECTS ALLOWED IS THAT THE INSPECTION IS CONDUCTED AT THE REQUIRED SENSITIVITY LEVEL AND THERE SHALL BE NO INDICATIONS ALLOWED. THE INSPECTOR PERFORMING THE INSPECTION SHALL BE CERTIFIED TO LEVEL II WITH THE INSPECTION PROCEDURE DEVELOPED BY A LEVEL III AS SPECIFIED IN NAS-410.

7. SHOT PEEN PER SAE AMS-S-13165 IN LIEU OF MIL-S-13165.

8. CORROSION PROTECTION PER MIL-C-16173 GRADE 2 OR MIL-C-11796 CLASS 3 IN LIEU OF MM5752.

9. IDENTIFICATION AND MARKING PER MIL-STD-130 IN LIEU OF TM1040.

10. ULTRASONIC INSPECTION PER MIL-STD-2154 TYPE I, CLASS A IN LIEU OF MIL-I-8950, CLASS A.

11. PAINT PER DRAWING REQUIREMENTS AS FOLLOWS:

A. APPLY ONE COAT EPOXY WATERBORNE PRIMER PER MIL-PRF-85582, TYPE I, CLASS 2 IN LIEU OF MIL-P-23377. ALTERNATE ONE COAT OF EPOXY POLYAMIDE PRIMER PER MIL-PRF-23377, TYPE I.

B. APPLY TWO TOPCOATS POLYURETHANE PER MIL-PRF-85285, TYPE I, COLOR NUMBER 17925 (WHITE) PER FED-STD-595, IN LIEU OF MIL-C-83286, WHICH HAS BEEN CANCELLED.

12. SERIAL NUMBER SHALL BE VIBROPEENED (WITH VIBRATING PNEUMATIC PENCIL), IN 0.09" LETTERS 0.004" - 0.007" DEEP IN THE LOCATION INDICATED. IF THE DRAWING DOES NOT INDICATE A LOCATION, OO-ALC/LGHLEN SHALL PROVIDE S/N LOCATION INSTRUCTIONS. SERIALIZATION OF ITEM SHALL BE ACCOMPLISHED AS FOLLOWS: THE SERIALIZATION SHALL BEGIN WITH THE CAGE (FSCM) OF THE CONTRACTOR NAMED ON THE CONTRACT, FOLLOWED BY A DASH AND THE 2 DIGIT YEAR OF MANUFACTURE, FOLLOWED BY A DASH AND A SEQUENTIALLY UNIQUE 3 DIGIT NUMBER. A CONTRACTOR WHO RECEIVES NUMEROUS INTERMITTENT CONTRACTS SHALL START SERIALIZATION OF ITEM WITH THE NEXT NUMBER IN SEQUENCE OF THE PRIOR CONTRACT. IF A CONTRACT PRODUCES MORE THAN 999 ITEMS, THE SERIAL NUMBER SHOULD BEGIN USING 4 DIGIT SERIAL NUMBERS. THE SERIAL NUMBER SHOULD APPEAR LIKE THIS: "S/N 98747-02-001".

13. MATL: AL BRONZE PER SAE AMS 4640 IN LIEU OF AMS 4640. (REF DWG 2006404-263)

14. CADMIUM PLATE PER SAE AMS-QQ-P-416 IN LIEU OF QQ-P-416.

15. MATL: 17-4PH CRES, COND H1150, PER SAE AMS 5643 IN LIEU OF AMS 5643. (REF DWG 2006404-265)

PREPARED BY	SYMBOL	DATE
CAROL HYER	LGMPM	5 Nov 02

REV:	ENGINEERING DATA REQUIREMENTS CONTINUATION SHEET *(ATTACHMENT "A")*
PART NUMBER 2006106-109	NATIONAL STOCK NUMBER 1620-01-442-0167

16. ADDITIONAL INFORMATION PER LILE ENGINEER - HARD ANODIZE 3.370/3.369 INCH DIAMETER BORE (ZONE A-5) PER MIL-A-8625 TYPE III, CLASS 1 IN LIEU OF FLAGNOTE #5 (CONVENTIONAL ANODIZE). FLAGNOTE #4 SHALL APPLY PRIOR TO HARD ANODIZE COATING AND FINISH DIAMETER SHALL BE 3.370/3.368 INCHES AFTER HARD ANODIZE WITH A 32 RMS FINISH.

17. INSTALL BUSHINGS PER THE FOLLOWING IN LIEU OF MM5743 TYPE III & IV:

A. THE BUSHING INSTALLATIONS SHALL BE ACCOMPLISHED IN SUCH A MANNER AS TO AVOID DAMAGE TO THE FINISH ON THE I.D. OF THE HOUSING INTO WHICH THE BUSHING IS INSTALLED, OR THE FINISH OF THE O.D. OF THE BUSHING. FORCED INSTALLATION OF SUB-ZERO INSTALLATIONS, SUCH AS THE USE OF A PRESS OR HAMMER IS NOT PERMITTED, AND IS NOT ACCEPTABLE. A SMALL NON-METALLIC HAMMER MAY BE USED TO TAP THE BUSHING INTO ALIGNMENT WITH THE HOUSING BORE, OR TO SEAT THE BUSHING.

B. PRIOR TO BUSHING INSTALLATION, THE PARTS AND HOUSING BORE SHALL BE CLEANED WITH A CLEANING SOLVENT TO REMOVE ALL CONTAMINATION.

C. LIQUID NITROGEN SHALL BE USED FOR ALL SUB-ZERO INSTALLATIONS UNLESS SOME OTHER SUB-ZERO COOLANT IS SPECIFIED, AND APPROVED BY OO-ALC/LGHLEN ENGINEERING. THE SOAK TIME OF THE BUSHING IN THE LIQUID NITROGEN SHALL BE SUFFICIENT TO ALLOW THE BUSHING TO REACH THE SAME TEMPERATURE AS THE COOLANT.

D. THE BUSHING SHALL BE INSTALLED INTO THE HOUSING IMMEDIATELY UPON REMOVAL FROM THE COOLANT WITH AN ABSOLUTE MINIMUM OF LOST TIME. TRIAL RUNS SHALL BE ACCOMPLISHED AS NECESSARY TO MINIMIZE INSTALLATION TIME WHICH SHOULD BE IN THE ORDER OF ABOUT SEVEN (7) SECONDS MAXIMUM.

E. IT MAY OCCASIONALLY BE NECESSARY TO HEAT THE HOUSING INTO WHICH THE BUSHING IS TO BE INSTALLED, IN ADDITION TO SUB-ZERO COOLING OF THE BUSHING. DETAIL PARTS IN PROCESS WILL NOT HAVE PAINT OR SEALANT OR OTHER ORGANIC MATERIAL APPLIED PRIOR TO HEATING, THE PARTS SHALL BE HEATED BY THE USE OF RADIANT HEAT TECHNIQUES, SUCH AS THERMAL BLANKETS, INFRARED LAMPS ETC.; TO THE MAXIMUM TEMPERATURE OF 250 F. TEMPERATURE MEASURING DEVICES SHALL BE USED TO MONITOR HEAT AND SHALL BE LOCATED ON AREAS OF THE PART EXPECTED TO REACH MAXIMUM TEMPERATURE. NO SCALING, OXIDATION, OR CORROSION SHALL BE PERMITTED.

F. BUSHINGS WITHOUT FLANGES SHALL BE INSTALLED INTO HOUSING BORE WHICH HAS RECEIVED A LIGHT COAT OF SEALANT PER MIL-PRF-81733. INSTALL SHRUNKEN BUSHING AND WIPE OFF ANY EXCESS SEALANT THAT MAY HAVE EXTRUDED AROUND THE PERIPHERY OF BOTH ENDS OF THE BUSHINGS.

G. BUSHINGS WITH FLANGES SHALL BE INSTALLED IN A SIMILAR MANNER AS PARAGRAPH (F) EXCEPT SEALANT SHALL ALSO BE APPLIED TO FACE OF LUG UNDER FLANGE. SEALANT SHALL BE APPLIED IN SUCH A MANNER AS TO ENSURE COMPLETE COVERAGE OF INSIDE FACE OF BUSHING FLANGE WHEN BUSHING IS INSTALLED. WIPE OFF ANY EXCESS SEALANT AROUND PERIPHERY OF BUSHING FLANGE. WIPE ANY EXCESS SEALANT FROM OTHER END OF BUSHING ALSO.

PREPARED BY	SYMBOL	DATE
CAROL HYER	LGMPM	5 Nov 02

H. FOR BUSHINGS WITH EXTERNAL GREASE GROOVES THE INSIDE OF THE LUG WILL BE COATED WITH MIL-C-16173 PRIOR TO BUSHING INSTALLATION AND FACE OF LUG WILL BE COATED WITH MIL-PRF-81733 PER PARAGRAPH G, IF BUSHING IS FLANGED.

18. OO-ALC/LGHLEN SYSTEM ENGINEERING RETAINS ALL RIGHTS TO REVIEW AND ACCEPT MATERIAL REVIEW BOARD (MRB'S) DISPOSITIONS PRIOR TO SHIPMENT OF DISCREPANT ITEM. ALL DEVIATIONS, MINOR AND MAJOR, FROM THE ENGINEERING DRAWING PACKAGE SHALL BE SUBMITTED FOR MRB DISPOSITION.

19. PRIOR TO CONTRACT AWARD, THE CONTRACTOR SHALL CERTIFY TO THE GOVERNMENT IN WRITING FULL COMPLIANCE WITH MANUALS, SPECIFICATIONS, AND STANDARDS CALLED OUT AND REQUIRED FOR THE MANUFACTURE OF THIS CONTRACTED LANDING GEAR COMPONENT/ASSEMBLY. CONTRACTOR IS RESPONSIBLE TO COMPLETELY SEARCH THESE MANUALS, SPECIFICATIONS, AND STANDARDS AND FULLY UNDERSTAND THE REQUIREMENTS NECESSARY TO MANUFACTURE LANDING GEAR COMPONENTS. ANY QUESTIONS CAN BE FORWARDED TO OO-ALC/LGHLEN.

20. AFTER CONTRACT AWARD THE SUCCESSFUL BIDDER SHALL PROVIDE A COPY OF THE PROCESSING DOCUMENTATION (ROUTING DOCUMENTS AND PROCESS SPECIFICATIONS) TO LGHLEN FOR FINAL REVIEW BEFORE PRODUCTION BEGINS.

21. THE FORGING SHALL BE PROCURED FROM THE ORIGINAL FORGING SOURCE, USING THE ORIGINAL CERTIFIED FORGING PROCEDURES AND DIES/TOOLING.

A. PRIOR TO CONTRACT AWARD, THE DETAILED PART BIDDER SHALL PROVIDE CERTIFICATION, FROM THE FORGING SOURCE, TO THE GOVERNMENT THAT THE CERTIFIED DIES AND PROCEDURES ARE AVAILABLE AND THE FORGING SOURCE HAS AN AGREEMENT WITH THE DETAIL PARTS BIDDER TO PROVIDE FORGINGS FOR THEIR USE IN THE EVENT THEY ARE THE SUCCESSFUL BIDDER.

B. PRIOR TO PRODUCTION, FORGING LOT QUALIFICATION SHALL BE ACCOMPLISHED AS SPECIFIED ON THE FORGING DRAWING AND SAE AMS-F-7190 FOR STEEL FORGINGS AND SAE AMS-A-22771 FOR ALUMINUM FORGINGS. THE DETAILED PART CONTRACTOR SHALL ASSURE THAT THIS HAS BEEN ACCOMPLISHED BY THE FORGING SOURCE AND SHALL SUBMIT CERTIFIED DOCUMENTATION OF ACCOMPLISHMENT TO THE GOVERNMENT.

22. FORGING SOURCE, CONTROL AND LOCATION OF DIES:

A. FORGING DRAWING: 2006256-7

B. DIE # 4902

C. CONTROL OF FORGING PROCESS: U.S.A.F.

D. LOCATION OF FORGING DIES: W. PAT CROW
200 LUXTON STR
PO BOX 1720
FT. WORTH, TX 76101
PHONE: 817-536-2861

REV:	ENGINEERING DATA REQUIREMENTS CONTINUATION SHEET *(ATTACHMENT "A")*

PART NUMBER	NATIONAL STOCK NUMBER
2006106-109	1620-01-442-0167

23. APPLY A THIN UNIFORM COATING OF PRIMER PER MIL-PRF-85582 TO ALL BUSHING BORES AND ALLOW TO FULLY CURE, PRIOR TO INSTALLATION OF BUSHING. (PRIMER SHALL NOT OBSTRUCT GREASE PASSAGES).

PREPARED BY	SYMBOL	DATE
CAROL HYER	LGMPM	5 Nov 02

SOURCE QUALIFICATION REQUIREMENTS
(PL98-525, SECTION 2319)

STOCK NR (NSN)1620-01-442-0167 PART NUMBER (P/N)2006106-105
NOUN: PISTON, LANDING GEAR AIRCRAFT:F-16

SECTION C

QUALIFICATION REQUIREMENTS THAT MUST BE SATISFIED TO BECOME A QUALIFIED SOURCE:

1. Because of the need for uninterrupted item support to military aircraft systems while keeping with the requirements of PL 98-525, the current acquisition need not and generally will not be delayed to provide an offeror an opportunity to qualify. Normal acquisition practices at OO-ALC should preclude the denial of opportunity to any interested offeror.

2. The offeror must provide a pre-contract award qualification article, which meets the requirements of the engineering drawings, material specifications, and process specifications. However, successful completion of the qualification testing does not guarantee any contract award. If the offeror is deemed qualified and awarded the contract, a post-contract award first ariticle exhibit may be required to verify production capability.

3. The qualification article will be subjected to form, fit, and function verification as well as required testing to assure compliance with data list and other applicable procurement criteria. The qualification article shall demonstrate full compatibility and comparability with existing parts.

4. The required materials will be procured from a qualified source and shall meet the requirements of their respective specifications. The offeror will assure that the supplier has accomplished this and shall submit certified documentation of accomplishment of the above requirements to the purchaser along with the pre-contract award qualification article.

5. The required forgings shall be procured from the qualified forging source using the original certified forging procedures and dies. Forging material and lot qualifications shall be accomplished as required in the specified forging drawing, P/N 2006106-105 and specification MIL-A-22771. The offeror shall assure that this is or has been accomplished by the forging source and will submit certified documentation of accomplishment of the above requirements to the government along with the pre-contract award qualification article.

6. The qualification article once submitted will become subject to such testing as deemed necessary by the U.S. Government to prove that the article meets all dimensional, processing and functional requirements. Such testing may result in the destruction of the article. Following completion of necessary testing and evaluation, the article no matter what its condition shall be returned to the contractor or disposed of at his discretion and direction whether it was found acceptable or not.

7. Form verification: The U.S. Government's Quality Verification Center (QVC) will be used to insure compliance with the dimensional requirements of the article. Material and processing compliance will also be verified as required.

8. Fit/function verification: Existing components and government test stands and fixtures will be utilized to verify physical interface and functional performance of articles.

9. Testing for material and process compliance.
   (a) Material analysis
   (b) Heat treat
   (c) Grinding
   (d) Plating
   (e) Finish
   (f) Grain flow
   (g) Other

SOURCE QUALIFICATION REQUIREMENTS
(PL98-525, SECTION 2319)

STOCK NR (NSN)1620-01-442-0167 PART NUMBER (P/N)2006106-105
NOUN: PISTON, LANDING GEAR AIRCRAFT:F-16

10. Remarks:

a. Organic verification capabilities exist at OO-ALC.

b. Testing requirements outside organic capabilities will be contracted out.

11. The estimated cost of government testing and evaluation is $3,000.

12. Maximum time for testing of the qualification article will not exceed 30 days from receipt at testing agency.

SECTION D

QUALIFICATION WAIVER REQUIREMENTS.

1. An offerer who has had previous experience in the manufacture and qualification of items, which can be correlated with this product, may apply to the design control authority at OO-ALC for a waiver of the above stated qualification requirements.

a. The qualification waiver criteria utilized by the design control authority to perform a qualification analysis are available upon request. The qualification waiver criteria may be used as a guide in preparing the offerer's written input to the design control authority.

b. The burden of proof for written inputs is on the offerer. The design control authority will not pursue authenticity verification of claims made by the offerer of product manufacturing experience with other Government or non-Government agencies. Unsubstantiated claims will not be considered in the waiver analysis process.

c. This waiver will be granted if and only if the design control authority (LILE) can establish the qualifications of the offerer through the evaluation of written inputs from the offerer or from previous knowledge of the offerer's capabilities or from previous experience with the offerer on similar item acquisitions. If there is any doubt about the offerer's capability, the offerer will be required to submit a pre-qualification article. There is no guarantee of qualification by similarity. LILE reserves the right to require a pre-qualification article of all offerers.

2. The current acquisition need not and will not be delayed in order to provide an offerer with an opportunity to meet the requirements for qualification waiver.

3. Maximum time for approval of qualification by similarity will not exceed 15 days.

REVISION: *06*

ENGINEERING DATA LIST

* HISTORY *

DATE :	DATA TECH :	ORGN SYMBOL :	PR NR :	APPLICATION:	PAGE
19MAR03	SCH	LGMPM		F-16	1 OF 1

CAGE:	MANUFACTURER NAME:	REFERENCE NR:	NOUN :	NSN :
13002	GOODRICH	2006101-105	SHOCK ABSORBER	1620012964328

CAGE	DRAWING NUMBER	REV	NR SHEETS	NR CARDS	FURN CODE	DIST CODE	NOUN	REQUIREMENTS
39661	MMD10009 /		0000	0000	S		SWAGING, GROOVED BEARING SET	
39661	MM4990 /		0000	0000	S		HEAT TREAT SPEC	
39661	MM5527 /		0000	0000	S		CHEMICAL MILL SPECIFICATION	
39661	MM5542 /		0000	0000	S		CAD PLATE SPEC	
17576	MM5752 /		0000	0000	S		CORROSION PROTECTION SPEC	
39661	MM5754 /		0000	0000	S		SWAGING OF STEEL TUBULAR SPEC	
17576	MM5759 /		0000	0000	S		GRINDING SPECIFICATION	
98747	OO-ALC FORM 462 /		0004	0000	S		ENGR DATA RQMTS (ATTACH A)	
17576	TM1040 /		0000	0000	S		IDENTIFICATION AND MARKING SPEC	
17576	2006101 /	M	0001	0000	S		PISTON ASSY, INNER - MLG SHK STR	
	/22245							ECD
17576	2006102 /	C	0001	0000	S		BEARING, SPECIAL - SHK STR, MLG	
17576	2006251 /	C	0001	0000	S		PISTON, INNE- MLG FORGING OF	

STANDARD ENGINEERING TEXT

ENGINEERING DATA LIST REMARKS

FURNISHED METHOD CODE LEGEND:

C - CLASSIFIED DOCUMENT.
S - FURNISHED WITH SOLICITATION.
M - STABLE BASE DRAWING REQUIRED; FURNISHED WITH CONTRACT AWARD.
X - DATA SUPPLIED (NOT IN EDCARS).
R - FURNISHED BY PCD UPON REQUEST.
P - PARTIAL DOCUMENT FURNISHED.
V - VENDOR DRAWING; (NOT PROVIDED).
G - GOV'T DOCUMENT.
O - OTHERS, CONTRACTOR MUST ACQUIRE.
A - DATA NOT AVAILABLE.

REV:	ENGINEERING DATA REQUIREMENTS (ATTACHMENT "A")

NOTE: MILITARY SPECIFICATIONS I/STANDARDS WILL NOT BE FURNISHED IN THE BID SET.

1. THE FOLLOWING INSTRUCTIONS ARE FURNISHED FOR THE MANUFACTURE OF

PISTON ASSY, INNER - MLG SHOCK STRUT

2. PART NUMBER	3. NATIONAL STOCK NUMBER
2006101-105	1620-01-296-4328

4. THE FOLLOWING SPECIFICATIONS/STANDARDS, ETC., WILL BE USED IN LIEU OF THE DATA INDICATED. THE SUPERSEDED DATA WILL NOT BE FURNISHED UNLESS SO INDICATED.

5. USE MATERIAL SAE AMS 6257 IN LIEU OF MIL-S-8844.

6. HEAT TREAT PER SAE AMS-H-6875 IN LIEU OF MIL-H-6875.

7. FOR PARTS HEAT TREATED TO 180 KSI AND ABOVE, ANY SURFACE GROUND/MACHINED AFTER HEAT TREAT, SHALL BE INSPECTED FOR ABUSIVE GRINDING/MACHINING BURNS PER MIL-STD-867. GRINDING SHALL BE PER MIL-STD-866 OR MM5759.

8. SHOT PEEN PER SAE AMS-S-13165 IN LIEU OF MIL-S-13165.

9. SPECIFICATION MM4951 CADMIUM PLATING WILL NOT BE FURNISHED AS IT IS LIMITED (PROPRIETARY) DATA. AS AN ALTERNATE USE SPECIFICATION MM5542, CADMIUM PLATING. (PROVIDED)

10. CHROME PLATE TO DRAWING REQUIREMENTS AND SAE AMS QQ-C-320 IN LIEU OF QQ-C-320.

11. SERIAL NUMBER SHALL BE VIBROPEENED (WITH VIBRATING PNEUMATIC PENCIL), IN 0.09" LETTERS 0.004" - 0.007" DEEP IN THE LOCATION INDICATED. IF THE DRAWING DOES NOT INDICATE A LOCATION, OO-ALC/LGHLEN SHALL PROVIDE S/N LOCATION INSTRUCTIONS. SERIALIZATION OF ITEM SHALL BE ACCOMPLISHED AS FOLLOWS: THE SERIALIZATION SHALL BEGIN WITH THE CAGE OF THE CONTRACTOR NAMED ON THE CONTRACT, FOLLOWED BY A DASH AND THE 2 DIGIT YEAR OF MANUFACTURE, FOLLOWED BY A DASH AND A SEQUENTIALLY UNIQUE 3 DIGIT NUMBER. A CONTRACTOR WHO RECEIVES NUMEROUS INTERMITTENT CONTRACTS SHALL START SERIALIZATION OF ITEM WITH THE NEXT NUMBER IN SEQUENCE OF THE PRIOR CONTRACT. IF A CONTRACT PRODUCES MORE THAN 999 ITEMS, THE SERIAL NUMBER SHOULD BEGIN USING 4 DIGIT SERIAL NUMBERS. THE SERIAL NUMBER SHOULD APPEAR LIKE THIS: "S/N 98747-03-001".

12. PERFORM MAGNETIC PARTICLE INSPECTION PER ASTM E 1444 IN LIEU OF MIL-I-6868. USE FULL WAVE DIRECT CURRENT (FWDC), WET CONTINUOUS METHOD, FLUORESCENT TYPE WITH THE FOLLOWING ACCEPTANCE/REJECTION CRITERIA: NO DEFECTS ALLOWED. THE INTENT OF NO DEFECTS ALLOWED IS THAT THE INSPECTION IS CONDUCTED AT THE REQUIRED SENSITIVITY LEVEL AND THERE SHALL BE NO INDICATIONS ALLOWED. THE INSPECTOR PERFORMING THE INSPECTION SHALL BE CERTIFIED TO LEVEL II WITH THE INSPECTION PROCEDURE DEVELOPED BY A LEVEL III AS SPECIFIED IN AIA/NAS NAS-410.

13. PAINT REQUIREMENTS AS FOLLOWS:

A. APPLY ONE COAT EPOXY PRIMER PER MIL-PRF-85582, TYPE I, CLASS 2. ALTERNATE ONE COAT OF EPOXY PRIMER PER MIL-PRF-23377, TYPE I IN LIEU OF MIL-P-23377.

B. APPLY TWO TOPCOATS PER MIL-PRF-85285, TYPE I, COLOR NUMBER 17925 (WHITE) PER FED-STD-595 IN LIEU OF MIL-C-83286.

14. DIMENSIONING AND TOLERANCING PER ASME Y14.5 IN LIEU OF ANSI Y14.5.

PREPARED BY	SYMBOL	DATE
CAROL HYER	LGMPM	24 Apr 03

REV:	ENGINEERING DATA REQUIREMEN. ,ONTINUATION SHEET *(ATTACHMENT "A")*
PART NUMBER 2006101-105	NATIONAL STOCK NUMBER 1620-01-296-4328

15. CORROSION PROTECTION PER MIL-C-16173 GRADE 3, MIL-C-11796 CLASS 3 OR MM5752.

16. SURFACE TEXTURE PER ASME B46.1 IN LIEU OF ASA B46.1.

17. IDENTIFICATION AND MARKING PER MIL-STD-130 OR TM1040.

18. CLEANLINESS PER SAE AMS 2300 IN LIEU OF AMS 2300.

19. CHEMICAL MILL PER SAE AMS-C-81769 OR MM5527.

20. PER DRAWING 2006102, FLAG NOTE 2, USE MATERIAL SAE AMS 5643 IN LIEU OF AMS 5643.

21. PER DRAWING 2006102, FLAT NOTE 3, USE MATERIAL SAE AMS 4640 IN LIEU OF AMS 4640 OR **ASTM B196,** IN LIEU OF QQ-C-530.

22. CHROME PLATE TO DRAWING REQUIREMENTS AND SAE AMS QQ-C-320 IN LIEU OF QQ-C-320.

23. PERFORM FLUORESCENT PENETRANT INSPECTION PER ASTM E1417, TYPE I, METHOD B OR C, LEVEL 3 OR 4, IN LIEU OF MIL-I-6866, WITH THE FOLLOWING ACCEPTANCE/REJECTION CRITERIA: NO DEFECTS ALLOWED. THE INTENT OF NO DEFECTS ALLOWED IS THAT THE INSPECTION IS CONDUCTED AT THE REQUIRED SENSITIVITY LEVEL AND THERE SHALL BE NO INDICATIONS ALLOWED. THE INSPECTOR PERFORMING THE INSPECTION SHALL BE CERTIFIED TO LEVEL II WITH THE INSPECTION PROCEDURE DEVELOPED BY A LEVEL III AS SPECIFIED IN AIA/NAS NAS-410.

24. OO-ALC/LGHLEN SYSTEM ENGINEERING RETAINS ALL RIGHTS TO REVIEW AND ACCEPT MATERIAL REVIEW BOARD (MRB'S) DISPOSITIONS PRIOR TO SHIPMENT OF DISCREPANT ITEM. ALL DEVIATIONS, MINOR AND MAJOR, FROM THE ENGINEERING DRAWING PACKAGE SHALL BE SUBMITTED FOR MRB DISPOSITION.

25. PRIOR TO CONTRACT AWARD, THE CONTRACTOR SHALL CERTIFY TO THE GOVERNMENT IN WRITING FULL COMPLIANCE WITH MANUALS, SPECIFICATIONS, AND STANDARDS CALLED OUT AND REQUIRED FOR THE MANUFACTURE OF THIS CONTRACTED LANDING GEAR COMPONENT/ASSEMBLY. CONTRACTOR IS RESPONSIBLE TO COMPLETELY SEARCH THESE MANUALS, SPECIFICATIONS, AND STANDARDS AND FULLY UNDERSTAND THE REQUIREMENTS NECESSARY TO MANUFACTURE LANDING GEAR COMPONENTS. ANY QUESTIONS CAN BE FORWARDED TO OO-ALC/LGHLEN.

26. AFTER CONTRACT AWARD, THE SUCCESSFUL BIDDER SHALL PROVIDE A COPY OF THE PROCESSING DOCUMENTATION (ROUTING DOCUMENTS AND PROCESS SPECIFICATIONS) TO LGHLEN FOR FINAL REVIEW BEFORE PRODUCTION BEGINS.

PREPARED BY	SYMBOL	DATE
CAROL HYER	LGMPM	24 Apr 03

REV:	ENGINEERING DATA REQUIREMENTS CONTINUATION SHEET *(ATTACHMENT "A")*

PART NUMBER	NATIONAL STOCK NUMBER
2006101-105	1620-01-296-4328

27. INSTALL BUSHINGS PER THE FOLLOWING IN LIEU OF MM5743:

A. THE BUSHING INSTALLATIONS SHALL BE ACCOMPLISHED IN SUCH A MANNER AS TO AVOID DAMAGE TO THE FINISH ON THE I.D. OF THE HOUSING INTO WHICH THE BUSHING IS INSTALLED, OR THE FINISH OF THE O.D. OF THE BUSHING. FORCED INSTALLATION OF SUB-ZERO INSTALLATIONS, SUCH AS THE USE OF A PRESS OR HAMMER IS NOT PERMITTED, AND IS NOT ACCEPTABLE. A SMALL NON-METALLIC HAMMER MAY BE USED TO TAP THE BUSHING INTO ALIGNMENT WITH THE HOUSING BORE, OR TO SEAT THE BUSHING.

B. PRIOR TO BUSHING INSTALLATION, THE PARTS AND HOUSING BORE SHALL BE CLEANED WITH A CLEANING SOLVENT TO REMOVE ALL CONTAMINATION.

C. LIQUID NITROGEN SHALL BE USED FOR ALL SUB-ZERO INSTALLATIONS UNLESS SOME OTHER SUB-ZERO COOLANT IS SPECIFIED, AND APPROVED BY OO-ALC/LGHLEN ENGINEERING. THE SOAK TIME OF THE BUSHING IN THE LIQUID NITROGEN SHALL BE SUFFICIENT TO ALLOW THE BUSHING TO REACH THE SAME TEMPERATURE AS THE COOLANT.

D. THE BUSHING SHALL BE INSTALLED INTO THE HOUSING IMMEDIATELY UPON REMOVAL FROM THE COOLANT WITH AN ABSOLUTE MINIMUM OF LOST TIME. TRIAL RUNS SHALL BE ACCOMPLISHED AS NECESSARY TO MINIMIZE INSTALLATION TIME WHICH SHOULD BE IN THE ORDER OF ABOUT SEVEN (7) SECONDS MAXIMUM.

E. IT MAY OCCASIONALLY BE NECESSARY TO HEAT THE HOUSING INTO WHICH THE BUSHING IS TO BE INSTALLED, IN ADDITION TO SUB-ZERO COOLING OF THE BUSHING. DETAIL PARTS IN PROCESS WILL NOT HAVE PAINT OR SEALANT OR OTHER ORGANIC MATERIAL APPLIED PRIOR TO HEATING, THE PARTS SHALL BE HEATED BY THE USE OF RADIANT HEAT TECHNIQUES, SUCH AS THERMAL BLANKETS, INFRARED LAMPS ETC.; TO THE MAXIMUM TEMPERATURE OF 250 F. TEMPERATURE MEASURING DEVICES SHALL BE USED TO MONITOR HEAT AND SHALL BE LOCATED ON AREAS OF THE PART EXPECTED TO REACH MAXIMUM TEMPERATURE. NO SCALING, OXIDATION, OR CORROSION SHALL BE PERMITTED.

F. BUSHINGS WITHOUT FLANGES SHALL BE INSTALLED INTO HOUSING BORE WHICH HAS RECEIVED A LIGHT COAT OF SEALANT PER MIL-PRF-81733. INSTALL SHRUNKEN BUSHING AND WIPE OFF ANY EXCESS SEALANT THAT MAY HAVE EXTRUDED AROUND THE PERIPHERY OF BOTH ENDS OF THE BUSHINGS.

G. BUSHINGS WITH FLANGES SHALL BE INSTALLED IN A SIMILAR MANNER AS PARAGRAPH (F) EXCEPT SEALANT SHALL ALSO BE APPLIED TO FACE OF LUG UNDER FLANGE. SEALANT SHALL BE APPLIED IN SUCH A MANNER AS TO ENSURE COMPLETE COVERAGE OF INSIDE FACE OF BUSHING FLANGE WHEN BUSHING IS INSTALLED. WIPE OFF ANY EXCESS SEALANT AROUND PERIPHERY OF BUSHING FLANGE. WIPE ANY EXCESS SEALANT FROM OTHER END OF BUSHING ALSO.

H. FOR BUSHINGS WITH EXTERNAL GREASE GROOVES THE INSIDE OF THE LUG WILL BE COATED WITH MIL-C-16173 PRIOR TO BUSHING INSTALLATION AND FACE OF LUG WILL BE COATED WITH MIL-PRF-81733 PER PARAGRAPH G, IF BUSHING IS FLANGED.

28. APPLY A THIN UNIFORM COATING OF PRIMER PER MIL-PRF-23377 OR MIL-PRF-85582 (AFTER CADMIUM PLATING) TO ALL BUSHING BORES AND ALLOW TO FULLY CURE PRIOR TO INSTALLATION OF BUSHING (PRIMER SHALL NOT OBSTRUCT GREASE PASSAGES).

PREPARED BY	SYMBOL	DATE
CAROL HYER	LGMPM	24 Apr 03

REV:	ENGINEERING DATA REQUIREMENTS CONTINUATION SHEET *(ATTACHMENT "A")*

PART NUMBER	NATIONAL STOCK NUMBER
2006101-105	1620-01-296-4328

29. THE REQUIRED FORGING WILL BE PROCURED FROM THE QUALIFIED FORGING SOURCE USING THE ORIGINAL CERTIFIED FORGING PROCEDURES AND DIES/TOOLING.

A. PRIOR TO CONTRACT AWARD, THE DETAILED PART BIDDER SHALL PROVIDE CERTIFICATION, FROM THE FORGING SOURCE, TO THE GOVERNMENT THAT THE CERTIFIED DIES AND PROCEDURES ARE AVAILABLE AND THE FORGING SOURCE HAS AN AGREEMENT WITH THE DETAIL PART BIDDER TO PROVIDE FORGINGS FOR THEIR USE IN THE EVENT THEY ARE THE SUCCESSFUL BIDDER.

B. PRIOR TO PRODUCTION, FORGING LOT QUALIFICATION SHALL BE ACCOMPLISHED AS SPECIFIED ON THE FORGING DRAWING AND SAE AMS-F-7190 FOR STEEL FORGINGS AND SAE AMS-A-22771 FOR ALUMINUM FORGINGS. THE DETAILED PART CONTRACTOR SHALL ASSURE THAT THIS HAS BEEN ACCOMPLISHED BY THE FORGING SOURCE AND SHALL SUBMIT CERTIFIED DOCUMENTATION OF ACCOMPLISHMENT TO THE GOVERNMENT.

30. FORGING SOURCE, CONTROL AND LOCATION OF DIES:

A. FORGING DRAWING: 2006251-1

B. CONTROL OF FORGING PROCESS: GOODRICH

C. LOCATION OF FORGING DIES:

SIFCO IND., INC
SIFCO FORGE GROUP
970 EAST 64TH STREET
CLEVELAND, OH 44103-1620
PHONE: 216-432-6287
POC: MARILYN IRVINE
DIE # 10692

KROPP FORGE CO.
5301 W. ROOSEVELT RD.
CICERO, IL 60804
PHONE: 708-652-6691
POC: CHUCK MEYER
DIE # 7434

PREPARED BY	SYMBOL	DATE
CAROL HYER	LGMPM	24 Apr 03

SOURCE QUALIFICATION REQUIREMENTS
(PL98-525, SECTION 2319)

STOCK NR (NSN)1620-01-296-4328 PART NUMBER (P/N)2006101-105
NOUN: Piston Assy, Inner- MLG Shock Strut AIRCRAFT:F-16

SECTION C

QUALIFICATION REQUIREMENTS THAT MUST BE SATISFIED TO BECOME A QUALIFIED SOURCE:

1. Because of the need for uninterrupted item support to military aircraft systems while keeping with the requirements of PL 98-525, the current acquisition need not and generally will not be delayed to provide an offeror an opportunity to qualify. Normal acquisition practices at OO-ALC should preclude the denial of opportunity to any interested offeror.

2. The offeror must provide a pre-contract award qualification article, which meets the requirements of the engineering drawings, material specifications, and process specifications. However, successful completion of the qualification testing does not guarantee any contract award. If the offeror is deemed qualified and awarded the contract, a post-contract award first ariticle exhibit may be required to verify production capability.

3. The qualification article will be subjected to form, fit, and function verification as well as required testing to assure compliance with data list and other applicable procurement criteria. The qualification article shall demonstrate full compatibility and comparability with existing parts.

4. The required materials will be procured from a qualified source and shall meet the requirements of their respective specifications. The offeror will assure that the supplier has accomplished this and shall submit certified documentation of accomplishment of the above requirements to the purchaser along with the pre-contract award qualification article.

5. The required forgings shall be procured from the qualified forging source using the original certified forging procedures and dies. Forging material and lot qualifications shall be accomplished as required in the specified forging drawing, P/N 2006101-105 and specification MIL-F-7190. The offeror shall assure that this is or has been accomplished by the forging source and will submit certified documentation of accomplishment of the above requirements to the government along with the pre-contract award qualification article.

6. The qualification article once submitted will become subject to such testing as deemed necessary by the U.S. Government to prove that the article meets all dimensional, processing and functional requirements. Such testing may result in the destruction of the article. Following completion of necessary testing and evaluation, the article no matter what its condition shall be returned to the contractor or disposed of at his discretion and direction whether it was found acceptable or not.

7. Form verification: The U.S. Government's Quality Verification Center (QVC) will be used to insure compliance with the dimensional requirements of the article. Material and processing compliance will also be verified as required.

8. Fit/function verification: Existing components and government test stands and fixtures will be utilized to verify physical interface and functional performance of articles.

9. Testing for material and process compliance.

(a) Material analysis
(b) Heat treat
(c) Grinding
(d) Plating
(e) Finish
(f) Grain flow
(g) Other

SOURCE QUALIFICATION REQUIREMENTS
(PL98-525, SECTION 2319)

STOCK NR (NSN)1620-01-296-4328
NOUN: Piston Assy, Inner- MLG Shock Strut

PART NUMBER (P/N)2006101-105
AIRCRAFT:F-16

10. Remarks:

a. Organic verification capabilities exist at OO-ALC.

b. Testing requirements outside organic capabilities will be contracted out.

11. The estimated cost of government testing and evaluation is $2000.

12. Maximum time for testing of the qualification article will not exceed 30 days from receipt at testing agency.

SECTION D

QUALIFICATION WAIVER REQUIREMENTS.

1. An offerer who has had previous experience in the manufacture and qualification of items, which can be correlated with this product, may apply to the design control authority at OO-ALC for a waiver of the above stated qualification requirements.

a. The qualification waiver criteria utilized by the design control authority to perform a qualification analysis are available upon request. The qualification waiver criteria may be used as a guide in preparing the offerer's written input to the design control authority.

b. The burden of proof for written inputs is on the offerer. The design control authority will not pursue authenticity verification of claims made by the offerer of product manufacturing experience with other Government or non-Government agencies. Unsubstantiated claims will not be considered in the waiver analysis process.

c. This waiver will be granted if and only if the design control authority (LGHLEN) can establish the qualifications of the offerer through the evaluation of written inputs from the offerer or from previous knowledge of the offerer's capabilities or from previous experience with the offerer on similar item acquisitions. If there is any doubt about the offerer's capability, the offerer will be required to submit a pre-qualification article. There is no guarantee of qualification by similarity. LGHLEN reserves the right to require a pre-qualification article of all offerers.

2. The current acquisition need not and will not be delayed in order to provide an offerer with an opportunity to meet the requirements for qualification waiver.

3. Maximum time for approval of qualification by similarity will not exceed 15 days.

REVISION: 05

ENGINEERING DATA LIST

* HISTORY *

DATE : 04MAR02	DATA TECH : SJH	ORGN SYMBOL : LGMPM	PR NR :	APPLICATION: F16	PAGE 1 OF 1

CAGE: 13002	MANUFACTURER NAME: BF GOODRICH	REFERENCE NR: 2006134-1	NOUN : CYLINDER, SHOCK STRUT	NSN : 1620014423188

CAGE	DRAWING NUMBER	REV	NR SHEETS	NR CARDS	FURN CODE	DIST CODE	NOUN	REQUIREMENTS
17576	MM5542 /		0000	0000	S		CADMIUM PLATING SPEC	
17576	MM5752 /		0000	0000	S		CORROSION PROTECTION SPEC	
17576	2006134 /		0000	0000	S		CYLINDER, OUTER	
	/99C0145							ECO
	/006983							ECD
	/008097							ECD
17576	2007207 /		0000	0000	S		CYLINDER, FORGING OF	

STANDARD ENGINEERING TEXT

ENGINEERING DATA LIST REMARKS

FURNISHED METHOD CODE LEGEND:

C - CLASSIFIED DOCUMENT.
S - FURNISHED WITH SOLICITATION.
M - STABLE BASE DRAWING REQUIRED; FURNISHED WITH CONTRACT AWARD
X - DATA SUPPLIED (NOT IN EDCARS).
R - FURNISHED BY PCD UPON REQUEST.
P - PARTIAL DOCUMENT FURNISHED.
V - VENDOR DRAWING; (NOT REQUIRED)
G - GOV'T DOCUMENT.
O - OTHERS, CONTRACTOR MUST ACQUIRE.
A - DATA NOT

REV:	ENGINEERING DATA REQUIREMENTS *(ATTACHMENT "A")*

NOTE: MILITARY SPECIFICATIONS I/STANDARDS WILL NOT BE FURNISHED IN THE BID SET.

1. THE FOLLOWING INSTRUCTIONS ARE FURNISHED FOR THE MANUFACTURE OF

CYLINDER, OUTER, SHOCK STRUT - MLG

2. PART NUMBER	3. NATIONAL STOCK NUMBER
2006134-1	1620-01-442-3188

4. THE FOLLOWING SPECIFICATIONS/STANDARDS, ETC., WILL BE USED IN LIEU OF THE DATA INDICATED. THE SUPERSEDED DATA WILL NOT BE FURNISHED UNLESS SO INDICATED.

5. MARKING AND IDENTIFICATION PER MIL-STD-130 IN LIEU OF TM1040.

6. PER DRAWING REQUIREMENTS, SERIAL NUMBER SHALL BE VIBROPEENED (WITH VIBRATING PNEUMATIC PENCIL) IN 0.09" LETTERS 0.004" - 0.007" DEEP IN THE LOCATION INDICATED. IF THE DRAWING DOES NOT INDICATE A LOCATION, OO-ALC/LILE SHALL PROVIDE S/N LOCATION INSTRUCTIONS. SERIALIZATION OF ITEM SHALL BE ACCOMPLISHED AS FOLLOWS: THE SERIALIZATION SHALL BEGIN WITH THE CAGE (FSCM) OF THE CONTRACTOR NAMED ON THE CONTRACT, FOLLOWED BY A DASH AND THE 2 DIGIT YEAR OF MANUFACTURE, FOLLOWED BY A DASH AND A SEQUENTIALLY UNIQUE 3 DIGIT NUMBER. A CONTRACTOR WHO RECEIVES NUMEROUS INTERMITTENT CONTRACTS SHALL START SERIALIZATION OF ITEM WITH THE NEXT NUMBER IN SEQUENCE OF THE PRIOR CONTRACT. IF A CONTRACT PRODUCES MORE THAN 999 ITEMS, THE SERIAL NUMBER SHOULD BEGIN USING 4 DIGIT SERIAL NUMBERS. THE SERIAL NUMBER SHOULD APPEAR LIKE THIS: "S/N 98747-02-001".

7. PER DRAWING REQUIREMENTS, PERFORM MAGNETIC PARTICLE INSPECTION PER ASTM E 1444 IN LIEU OF MIL-I-6868. USE FULL WAVE DIRECT CURRENT (FWDC), WET CONTINUOUS METHOD, FLUORESCENT TYPE WITH THE FOLLOWING ACCEPTANCE/REJECTION CRITERIA: NO DEFECTS ALLOWED. THE INTENT OF NO DEFECTS ALLOWED IS THAT THE INSPECTION IS CONDUCTED AT THE REQUIRED SENSITIVITY LEVEL AND THERE SHALL BE NO INDICATIONS ALLOWED. THE INSPECTOR PERFORMING THE INSPECTION SHALL BE CERTIFIED TO LEVEL II WITH THE INSPECTION PROCEDURE DEVELOPED BY A LEVEL III AS SPECIFIED IN NAS-410.

8. PER DRAWINGS 2006134 AND 2007207, MATERIAL PER SAE AMS 6257 IN LIEU OF MIL-S-8844 CL 3.

9. PER DRAWING 2007207, CLEANLINESS PER SAE AMS 2300 IN LIEU OF AMS 2300.

10. PER DRAWING REQUIREMENTS, HEAT TREAT PER SAE AMS-H-6875 IN LIEU OF MIL-H-6875 AND MM4990.

11. FOR PARTS HEAT TREATED TO 180 KSI AND ABOVE, ANY SURFACE GROUND/MACHINED AFTER HEAT TREAT SHALL BE INSPECTED FOR ABUSIVE GRINDING/MACHINING BURNS PER MIL-STD-867. GRINDING SHALL BE PER MIL-STD-866 IN LIEU OF MM 5759.

12. PER DRAWING REQUIREMENTS, CADMIUM PLATE PER MM5542 (SUPPLIED) IN LIEU OF MM4951.

PREPARED BY	SYMBOL	DATE
JOAN HYATT	LGMPM	26 Mar 02

REV:	ENGINEERING DATA REQUIREMENTS CONTINUATION SHEET *(ATTACHMENT "A")*

PART NUMBER	NATIONAL STOCK NUMBER
2006134-1	1620-01-442-3188

13. PER DRAWING 2006134, CHROME PLATE PER SAE AMS-QQ-C-320 CL 2 IN LIEU OF QQ-C-320 CL 2.

14. PER DRAWING 2006134, SHOT PEEN PER SAE AMS-S-13165 IN LIEU OF MIL-S-13165.

15. PER DRAWING 2006134, PAINT AS FOLLOWS:

APPLY ONE COAT EPOXY WATERBORNE PRIMER PER MIL-PRF-85582 TYPE 1, CL 2. ALTERNATE ONE COAT OF EPOXY POLYAMIDE PRIMER PER MIL-PRF-23377 TYPE 1. APPLY TWO TOPCOATS POLYURETHANE PER MIL-PRF-85285 TYPE I, COLOR NUMBER 17925 (WHITE) PER FED-STD-595 IN LIEU OF MIL-C-83286 WHICH HAS BEEN CANCELLED.

16. PER DRAWING 2007207, FORGE PER SAE AMS-F-7190 GRADE A IN LIEU OF MIL-F-7190 GRADE A.

17. THE FORGING SHALL BE PROCURED FROM THE ORIGINAL FORGING SOURCE, USING THE ORIGINAL CERTIFIED FORGING PROCEDURES AND DIES/TOOLING.

A. PRIOR TO CONTRACT AWARD, THE DETAILED PART BIDDER SHALL PROVIDE CERTIFICATION FROM THE FORGING SOURCE, TO THE GOVERNMENT THAT THE CERTIFIED DIES AND PROCEDURES ARE AVAILABLE AND THE FORGING SOURCE HAS AN AGREEMENT WITH THE DETAIL PARTS BIDDER TO PROVIDE FORGINGS FOR THEIR USE IN THE EVENT THEY ARE THE SUCCESSFUL BIDDER.

B. PRIOR TO PRODUCTION, FORGING LOT QUALIFICATION SHALL BE ACCOMPLISHED AS SPECIFIED ON THE FORGING DRAWING AND SAE AMS-F-7190 FOR STEEL FORGINGS. THE DETAILED PART CONTRACTOR SHALL ASSURE THAT THIS HAS BEEN ACCOMPLISHED BY THE FORGING SOURCE AND SHALL SUBMIT CERTIFIED DOCUMENTATION OF ACCOMPLISHMENT TO THE GOVERNMENT.

18. FORGING SOURCES, CONTROL AND LOCATION OF DIES:

A. FORGING DRAWING: 2007207-1

B. DIE # **4912** (W. PAT CROW, INC.); DIE # **933** (SHULTZ STEEL); DIE # **10822** (SIFCO FORGE GROUP)

C. CONTROL OF FORGING PROCESS: W. PAT CROW, INC.; SHULTZ STEEL; SIFCO FORGE GROUP

D. LOCATION OF FORGING DIES:

W. PAT CROW, INC.
200 LUXTON STREET
P.O. BOX 1720
FT. WORTH, TX 76101-1720
CAGE: 94790
(817) 536-2861 X280

PREPARED BY	SYMBOL	DATE
JOAN HYATT	LGMPM	26 MAR 02

REV:	ENGINEERING DATA REQUIREMENTS CONTINUATION SHEET *(ATTACHMENT "A")*

PART NUMBER	NATIONAL STOCK NUMBER
2006134-1	1620-01-442-3188

SHULTZ STEEL
5321 FIRESTONE BLVD.
SOUTHGATE, CA 90280-3629
CAGE: 86985
(323) 357-3208

SIFCO FORGE GROUP
970 EAST 64TH STREET
CLEVELAND, OH 44103-1620
CAGE: 78226
(216) 432-6284

19. IF FORGING SOURCE IS NOT IDENTIFIED PRIOR TO CONTRACT AWARD, THE CONTRACTOR SHALL ADVISE THE GOVERNMENT IN WRITING OF THE INTENT TO PROCURE NEW FORGING DIES AND THE PROPOSED FORGING SOURCE. THE CONTRACTOR SHALL NOT PROCEED TO OBTAIN NEW FORGINGS DIES WITHOUT THE EXPRESS WRITTEN CONSENT OF THE GOVERNMENT-PROCURING ACTIVITY. THE GOVERNMENT SHALL HAVE UNLIMITED USE OF THE DIES DEVELOPED UNDER THIS CONTRACT. THE CONTRACTOR SHALL INFORM THE FORGING HOUSE IN WRITING, AT THE SAME TIME OF THE ORDER FOR THE DIES IS PLACED, THAT THE GOVERNMENT HAS UNLIMITED USE RIGHTS OF THE DIES AND FORWARD A COPY OF THIS LETTER TO THE GOVERNMENT CONTRACTING OFFICER.

20. AFTER CONTRACT AWARD, THE SUCCESSFUL BIDDER SHALL PROVIDE A COPY OF THE PROCESSING DOCUMENTATION (ROUTING DOCUMENTS AND PROCESS SPECIFICATIONS) TO LILE FOR FINAL REVIEW BEFORE PRODUCTION BEGINS.

21. OO-ALC/LILE SYSTEM ENGINEERING RETAINS ALL RIGHTS TO REVIEW AND ACCEPT MRB'S PRIOR TO SHIPMENT OF DISCREPANT ITEM. ALL DEVIATIONS, MINOR AND MAJOR, FROM THE ENGINEERING DRAWING PACKAGE WILL BE SUBMITTED FOR MRB DISPOSITION.

22. PRIOR TO CONTRACT AWARD, THE CONTRACTOR WILL CERTIFY TO THE GOVERNMENT IN WRITING FULL COMPLIANCE WITH MANUALS, SPECIFICATIONS, AND STANDARDS CALLED OUT AND REQUIRED FOR THE MANUFACTURE OF THIS CONTRACTED LANDING GEAR COMPONENTS/ASSEMBLIES. THE CONTRACTOR IS RESPONSIBLE TO COMPLETELY SEARCH THESE MANUALS, SPECIFICATIONS, AND STANDARDS AND FULLY UNDERSTAND THE REQUIREMENTS NECESSARY TO MANUFACTURE THESE COMPONENTS. ANY QUESTIONS CAN BE FORWARDED TO THIS OFFICE OO-ALC/LILE.

PREPARED BY	SYMBOL	DATE
JOAN HYATT	LGMPM	26 Mar 02

SOURCE QUALIFICATION REQUIREMENTS
(PL98-525, SECTION 2319)

STOCK NR (NSN)1620-01-442-3188 PART NUMBER (P/N)2006134-1
NOUN: Cylinder, Outer, Shock Strut- MLG AIRCRAFT:F-16

SECTION C

QUALIFICATION REQUIREMENTS THAT MUST BE SATISFIED TO BECOME A QUALIFIED SOURCE:

1. Because of the need for uninterrupted item support to military aircraft systems while keeping with the requirements of PL 98-525, the current acquisition need not and generally will not be delayed to provide an offeror an opportunity to qualify. Normal acquisition practices at OO-ALC should preclude the denial of opportunity to any interested offeror.

2. The offeror must provide a pre-contract award qualification article, which meets the requirements of the engineering drawings, material specifications, and process specifications. However, successful completion of the qualification testing does not guarantee any contract award. If the offeror is deemed qualified and awarded the contract, a post-contract award first ariticle exhibit may be required to verify production capability.

3. The qualification article will be subjected to form, fit, and function verification as well as required testing to assure compliance with data list and other applicable procurement criteria. The qualification article shall demonstrate full compatibility and comparability with existing parts.

4. The required materials will be procured from a qualified source and shall meet the requirements of their respective specifications. The offeror will assure that the supplier has accomplished this and shall submit certified documentation of accomplishment of the above requirements to the purchaser along with the pre-contract award qualification article.

5. The required forgings shall be procured from the qualified forging source using the original certified forging procedures and dies. Forging material and lot qualifications shall be accomplished as required in the specified forging drawing, P/N 2006134-1 and specification MIL-F-7190. The offeror shall assure that this is or has been accomplished by the forging source and will submit certified documentation of accomplishment of the above requirements to the government along with the pre-contract award qualification article.

6. The qualification article once submitted will become subject to such testing as deemed necessary by the U.S. Government to prove that the article meets all dimensional, processing and functional requirements. Such testing may result in the destruction of the article. Following completion of necessary testing and evaluation, the article no matter what its condition shall be returned to the contractor or disposed of at his discretion and direction whether it was found acceptable or not.

7. Form verification: The U.S. Government's Quality Verification Center (QVC) will be used to insure compliance with the dimensional requirements of the article. Material and processing compliance will also be verified as required.

8. Fit/function verification: Existing components and government test stands and fixtures will be utilized to verify physical interface and functional performance of articles.

9. Testing for material and process compliance.

(a) Material analysis
(b) Heat treat
(c) Grinding
(d) Plating
(e) Finish
(f) Grain flow
(g) Other

SOURCE QUALIFICATION REQUIREMENTS
(PL98-525, SECTION 2319)

STOCK NR (NSN)1620-01-442-3188 PART NUMBER (P/N)2006134-1
NOUN: Cylinder, Outer, Shock Strut- MLG AIRCRAFT:F-16

10. Remarks:

a. Organic verification capabilities exist at OO-ALC.

b. Testing requirements outside organic capabilities will be contracted out.

11. The estimated cost of government testing and evaluation is $5,000.

12. Maximum time for testing of the qualification article will not exceed 30 days from receipt at testing agency.

SECTION D

QUALIFICATION WAIVER REQUIREMENTS.

1. An offerer who has had previous experience in the manufacture and qualification of items, which can be correlated with this product, may apply to the design control authority at OO-ALC for a waiver of the above stated qualification requirements.

a. The qualification waiver criteria utilized by the design control authority to perform a qualification analysis are available upon request. The qualification waiver criteria may be used as a guide in preparing the offerer's written input to the design control authority.

b. The burden of proof for written inputs is on the offerer. The design control authority will not pursue authenticity verification of claims made by the offerer of product manufacturing experience with other Government or non-Government agencies. Unsubstantiated claims will not be considered in the waiver analysis process.

c. This waiver will be granted if and only if the design control authority (LILE) can establish the qualifications of the offerer through the evaluation of written inputs from the offerer or from previous knowledge of the offerer's capabilities or from previous experience with the offerer on similar item acquisitions. If there is any doubt about the offerer's capability, the offerer will be required to submit a pre-qualification article. There is no guarantee of qualification by similarity. LILE reserves the right to require a pre-qualification article of all offerers.

2. The current acquisition need not and will not be delayed in order to provide an offerer with an opportunity to meet the requirements for qualification waiver.

3. Maximum time for approval of qualification by similarity will not exceed 15 days.

REVISION: *05*

ENGINEERING DATA LIST

* HISTORY *

DATE :	DATA TECH :	ORGN SYMBOL :	PR NR :	APPLICATION:	PAGE
07MAR03	SCH	LGMPM		F-16	1 OF 1

CAGE:	MANUFACTURER NAME:	REFERENCE NR:	NOUN :	NSN :
13002	GOODRICH	2006644-103	CYL ASSY, INNER SHOCK STR, NLG	1620010710534

CAGE	DRAWING NUMBER	REV	NR SHEETS	NR CARDS	FURN CODE	DIST CODE	NOUN	REQUIREMENTS
39661	MM4995 /	AM	0000	0000	S		HEAT TREAT SPEC	
17576	MM5542 /	BC	0000	0000	S		CAD PLATING SPEC	
98747	OO-ALC FORM 462 /	A	0000	0000	S		ENGR DATA RQMTS (ATTACH A)	
17576	2006404-247 /	J	0001	0000	S		BUSHING SLEEVE - LANDING GEAR	
17576	2006404-249 /	H	0001	0000	S		BUSHING SLEEVE - LANDING GEAR	
17576	2006644 /	L	0001	0000	S		CYL ASSY, INNER - SHO STR, NLG	
17576	2006744 /	C	0001	0000	S		CYL INNER, FORGING OF	

STANDARD ENGINEERING TEXT

ALL GOVERNMENT/MILITARY SPECIFICATIONS AND STANDARDS WILL NOT BE FURNISHED.
TO OBTAIN THESE SPECS AND STDS WRITE TO:
DODSSP
BUILDING 4/SECTION D
700 ROBINS AVE.
PHILADELPHIA PA. 19111-5098
TELEPHONE: (215) 697-2179
FAX: (215) 697-1462
TO VIEW OR ORDER: HTTP://WWW.DODSSP.DAPS.MIL

ENGINEERING DATA LIST REMARKS

FURNISHED METHOD CODE LEGEND:

C - CLASSIFIED DOCUMENT.
S - FURNISHED WITH SOLICITATION.
M - STABLE BASE DRAWING REQUIRED; FURNISHED WITH CONTRACT AWARD
X - DATA SUPPLIED (NOT IN EDCARS).
R - FURNISHED BY PCD UPON REQUEST.
P - PARTIAL DOCUMENT FURNISHED.
V - VENDOR DRAWING; (NOT PROVIDED)
G - GOV'T DOCUMENT.
O - OTHERS, CONTRACTOR MUST ACQUIRE.
A - DATA NOT

REV: A	ENGINEERING DATA REQUIREMENTS (ATTACHMENT "A")

NOTE: MILITARY SPECIFICATIONS I/STANDARDS WILL NOT BE FURNISHED IN THE BID SET.

1. THE FOLLOWING INSTRUCTIONS ARE FURNISHED FOR THE MANUFACTURE OF

CYLINDER ASSY, INNER - SHOCK STRUT, NLG

2. PART NUMBER	3. NATIONAL STOCK NUMBER
2006644-103	1620-01-071-0534

4. THE FOLLOWING SPECIFICATIONS/STANDARDS, ETC., WILL BE USED IN LIEU OF THE DATA INDICATED. THE SUPERSEDED DATA WILL NOT BE FURNISHED UNLESS SO INDICATED.

5. HEAT TREAT PER SAE AMS-H-6875 IN LIEU OF MIL-H-6875, WHICH HAS BEEN CANCELLED.

6. FOR PARTS HEAT-TREATED TO 180 KSI AND ABOVE, ANY SURFACE GROUND/MACHINED AFTER HEAT TREAT, SHALL BE INSPECTED FOR ABUSIVE GRINDING/MACHINING BURNS PER MIL-STD-867. GRINDING SHALL BE PER MIL-STD-866.

7. PERFORM MAGNETIC PARTICLE INSPECTION PER ASTM E 1444. USE FULL WAVE DIRECT CURRENT (FWDC), WET CONTINUOUS METHOD, FLUORESCENT TYPE WITH THE FOLLOWING ACCEPTANCE/REJECTION CRITERIA: NO DEFECTS ALLOWED. THE INTENT OF NO DEFECTS ALLOWED IS THAT THE INSPECTION IS CONDUCTED AT THE REQUIRED SENSITIVITY LEVEL AND THERE SHALL BE NO INDICATIONS ALLOWED. THE INSPECTOR PERFORMING THE INSPECTION SHALL BE CERTIFIED TO LEVEL II WITH THE INSPECTION PROCEDURE DEVELOPED BY A LEVEL III AS SPECIFIED IN NAS-410.

8. SHOT PEEN PER SAE AMS-S-13165 IN LIEU OF MIL-S-13165, WHICH HAS BEEN CANCELLED.

9. INSTALL BUSINGS PER THE FOLLOWING IN LIEU OF MM5743:

A. THE BUSHING INSTALLATIONS SHALL BE ACCOMPLISHED IN SUCH A MANNER AS TO AVOID DAMAGE TO THE FINISH ON THE I.D. OF THE HOUSING INTO WHICH THE BUSHING IS INSTALLED, OR THE FINISH OF THE O.D. OF THE BUSHING. FORCED INSTALLATION OF SUB-ZERO INSTALLATIONS, SUCH AS THE USE OF A PRESS OR HAMMER IS NOT PERMITTED, AND IS NOT ACCEPTABLE. A SMALL NON-METALLIC HAMMER MAY BE USED TO TAP THE BUSHING INTO ALIGNMENT WITH THE HOUSING BORE, OR TO SEAT THE BUSHING.

B. PRIOR TO BUSHING INSTALLATION, THE PARTS AND HOUSING BORE SHALL BE CLEANED WITH A CLEANING SOLVENT TO REMOVE ALL CONTAMINATION.

C. LIQUID NITROGEN SHALL BE USED FOR ALL SUB-ZERO INSTALLATIONS UNLESS SOME OTHER SUB-ZERO COOLANT IS SPECIFIED, AND APPROVED BY OO-ALC/LILEC ENGINEERING. THE SOAK TIME OF THE BUSHING IN THE LIQUID NITROGEN SHALL BE SUFFICIENT TO ALLOW THE BUSHING TO REACH THE SAME TEMPERATURE AS THE COOLANT.

D. THE BUSHING SHALL BE INSTALLED INTO THE HOUSING IMMEDIATELY UPON REMOVAL FROM THE COOLANT WITH AN ABSOLUTE MINIMUM OF LOST TIME. TRIAL RUNS SHALL BE ACCOMPLISHED AS NECESSARY TO MINIMIZE INSTALLATION TIME WHICH SHOULD BE IN THE ORDER OF ABOUT SEVEN (7) SECONDS MAXIMUM.

PREPARED BY	SYMBOL	DATE
CAROL HYER	LGMPM	8 Mar 03

E. IT MAY OCCASIONALLY BE NECESSARY TO HEAT THE HOUSING INTO WHICH THE BUSHING IS TO BE INSTALLED, IN ADDITION TO SUB-ZERO COOLING OF THE BUSHING. DETAIL PARTS IN PROCESS WILL NOT HAVE PAINT OR SEALANT OR OTHER ORGANIC MATERIAL APPLIED PRIOR TO HEATING, THE PARTS SHALL BE HEATED BY THE USE OF RADIANT HEAT TECHNIQUES, SUCH AS THERMAL BLANKETS, INFRARED LAMPS ETC.; TO THE MAXIMUM TEMPERATURE OF 250 F. TEMPERATURE MEASURING DEVICES SHALL BE USED TO MONITOR HEAT AND SHALL BE LOCATED ON AREAS OF THE PART EXPECTED TO REACH MAXIMUM TEMPERATURE. NO SCALING, OXIDATION, OR CORROSION SHALL BE PERMITTED.

F. BUSHINGS WITHOUT FLANGES SHALL BE INSTALLED INTO HOUSING BORE WHICH HAS RECEIVED A LIGHT COAT OF SEALANT PER MIL-PRF-81733. INSTALL SHRUNKEN BUSHING AND WIPE OFF ANY EXCESS SEALANT THAT MAY HAVE EXTRUDED AROUND THE PERIPHERY OF BOTH ENDS OF THE BUSHINGS.

G. BUSHINGS WITH FLANGES SHALL BE INSTALLED IN A SIMILAR MANNER AS PARAGRAPH (F) EXCEPT SEALANT SHALL ALSO BE APPLIED TO FACE OF LUG UNDER FLANGE. SEALANT SHALL BE APPLIED IN SUCH A MANNER AS TO ENSURE COMPLETE COVERAGE OF INSIDE FACE OF BUSHING FLANGE WHEN BUSHING IS INSTALLED. WIPE OFF ANY EXCESS SEALANT AROUND PERIPHERY OF BUSHING FLANGE. WIPE ANY EXCESS SEALANT FROM OTHER END OF BUSHING ALSO.

H. FOR BUSHINGS WITH EXTERNAL GREASE GROOVES THE INSIDE OF THE LUG WILL BE COATED WITH MIL-C-16173 PRIOR TO BUSHING INSTALLATION AND FACE OF LUG WILL BE COATED WITH MIL-PRF-81733 PER PARAGRAPH G, IF BUSHING IS FLANGED.

10. APPLY A THIN UNIFORM COATING OF PRIMER PER MIL-PRF-23377 OR MIL-PRF-85582 (AFTER CADMIUM PLATING) TO ALL BUSHING BORES AND ALLOW TO FULLY CURE PRIOR TO INSTALLATION OF BUSHING (PRIMER SHALL NOT OBSTRUCT GREASE PASSAGES).

11. PAINT REQUIREMENTS ARE AS FOLLOWS:

A. APPLY ONE COAT EPOXY WATERBORNE PRIMER PER MIL-PRF-85582, TYPE I, CLASS 2. ALTERNATE ONE COAT OF EPOXY POLYAMIDE PRIMER PER MIL-PRF-23377, TYPE I.

B. APPLY TWO TOPCOATS POLYURETHANE PER MIL-PRF-85285, TYPE I, COLOR NUMBER 17925 (WHITE) PER FED-STD-595, IN LIEU OF MIL-C-83286, WHICH HAS BEEN CANCELLED.

12. SPECIFICATION MM4951 CADMIUM PLATING WILL NOT BE FURNISHED AS IT IS LIMITED (PROPRIETARY) DATA. AS AN ALTERNATE USE SPEC MM5542, CADMIUM PLATING (PROVIDED) OR MIL-STD-870, TYPE 2, CLASS 1.

13. CORROSION PROTECTION PER MIL-C-16173 GRADE 1 OR MIL-C-11796 CLASS 1 OR 2 IN LIEU OF MM5752.

14. PERFORM FLUORESCENT PENETRANT INSPECTION PER ASTM E 1417, TYPE I, METHOD B OR C, LEVEL 3 OR 4 WITH THE FOLLOWING ACCEPTANCE/REJECTION CRITERIA: NO DEFECTS ALLOWED. THE INTENT OF NO DEFECTS ALLOWED IS THAT THE INSPECTION IS CONDUCTED AT THE REQUIRED SENSITIVITY LEVEL AND THERE SHALL BE NO INDICATIONS ALLOWED. THE INSPECTOR PERFORMING THE INSPECTION SHALL BE CERTIFIED TO LEVEL II WITH THE INSPECTION PROCEDURE DEVELOPED BY A LEVEL III AS SPECIFIED IN NAS-410.

REV: A	ENGINEERING DATA REQUIREMENTS CONTINUATION SHEET *(ATTACHMENT "A")*	
PART NUMBER 2006644-103		NATIONAL STOCK NUMBER 1620-01-071-0534

15. SERIAL NUMBER SHALL BE VIBROPEENED (WITH VIBRATING PNEUMATIC PENCIL), IN 0.09" LETTERS 0.004" - 0.007" DEEP IN THE LOCATION INDICATED. IF THE DRAWING DOES NOT INDICATE A LOCATION, OO-ALC/LILE WILL PROVIDE S/N LOCATION INSTRUCTIONS. SERIALIZATION OF ITEM SHALL BE ACCOMPLISHED AS FOLLOWS: THE SERIALIZATION SHALL BEGIN WITH THE CAGE OF THE CONTRACTOR NAMED ON THE CONTRACT, FOLLOWED BY A DASH AND THE 2 DIGIT YEAR OF MANUFACTURE, FOLLOWED BY A DASH AND A SEQUENTIALLY UNIQUE 3 DIGIT NUMBER. A CONTRACTOR WHO RECEIVES NUMEROUS INTERMITTENT CONTRACTS SHALL START SERIALIZATION OF ITEM WITH THE NEXT NUMBER IN SEQUENCE OF THE PRIOR CONTRACT. IF A CONTRACT PRODUCES MORE THAN 999 ITEMS, THE SERIAL NUMBER SHOULD BEGIN USING 4 DIGIT SERIAL NUMBERS. THE SERIAL NUMBER SHOULD APPEAR LIKE THIS: "S/N 98747-03-001".

16. IDENTIFICATION AND MARKING PER MIL-STD-130 IN LIEU OF TM1040.

17. CHEMICAL MILL PER SAE AMS-C-81769 IN LIEU OF MM5527.

18. THE FORGINGS SHALL BE PROCURED FROM THE ORIGINAL FORGING SOURCE, USING THE ORIGINAL CERTIFIED FORGING PROCEDURES AND DIES/TOOLING.

A. PRIOR TO CONTRACT AWARD, THE DETAIL PART BIDDER SHALL PROVIDE CERTIFICATION, FROM THE FORGING SOURCE, TO THE GOVERNMENT THAT THE CERTIFIED DIES AND PROCEDURES ARE AVAILABLE AND THE FORGING SOURCE HAS AN AGREEMENT WITH THE DETAIL PART BIDDER TO PROVIDE FORGINGS FOR THEIR USE IN THE EVENT THEY ARE THE SUCCESSFUL BIDDER.

B. PRIOR TO PRODUCTION, FORGING LOT QUALIFICATION SHALL BE ACCOMPLISHED AS SPECIFIED ON THE FORGING DRAWING AND SAE AMS-F-7190 FOR STEEL FORGINGS AND SAE AMS-A-22771 FOR ALUMINUM FORGINGS. THE DETAILED PART CONTRACTOR SHALL ASSURE THAT THIS HAS BEEN ACCOMPLISHED BY THE FORGING SOURCE AND SHALL SUBMIT CERTIFIED DOCUMENTATION OF ACCOMPLISHMENT TO THE GOVERNMENT.

19. FORGING SOURCE, CONTROL AND LOCATION OF DIES:

A. FORGING DRAWING: 2006744-1
DIE NUMBER: 10124

B. CONTROL OF FORGING PROCESS: B.F. GOODRICH

C. LOCATION OF FORGING DIES:

SIFCO IND., INC
SIFCO FORGE GROUP
970 E. 64TH STR.
CLEVELAND, OH 44103-1620
PHONE: 216-881-8600 X287
POC: MARILYN IRVINE

PREPARED BY	SYMBOL	DATE
CAROL HYER	LGMPM	8 Mar 03

REV: A	ENGINEERING DATA REQUIREMENTS CONTINUATION SHEET *(ATTACHMENT "A")*	
PART NUMBER 2006644-103		NATIONAL STOCK NUMBER 1620-01-071-0534

20. OO-ALC/LILE SYSTEM ENGINEERING RETAINS ALL RIGHTS TO REVIEW AND ACCEPT MATERIAL REVIEW BOARD'S (MRB'S) DISPOSITIONS PRIOR TO SHIPMENT OF DISCREPANT ITEM. ALL DEVIATIONS, MINOR AND MAJOR, FROM THE ENGINEERING DRAWING PACKAGE SHALL BE SUBMITTED FOR MRB DISPOSITION.

21. PRIOR TO CONTRACT AWARD, THE CONTRACTOR SHALL CERTIFY TO THE GOVERNMENT IN WRITING FULL COMPLIANCE WITH MANUALS, SPECIFICATIONS, AND STANDARDS CALLED OUT AND REQUIRED FOR THE MANUFACTURE OF THIS CONTRACTED LANDING GEAR COMPONENT/ASSEMBLY. CONTRACTOR IS RESPONSIBLE TO COMPLETELY SEARCH THESE MANUALS, SPECIFICATIONS, AND STANDARDS AND FULLY UNDERSTAND THE REQUIREMENTS NECESSARY TO MANUFACTURE LANDING GEAR COMPONENTS. ANY QUESTIONS CAN BE FORWARDED TO OO-ALC/LILE.

22. AFTER CONTRACT AWARD THE SUCCESSFUL BIDDER SHALL PROVIDE A COPY OF THE PROCESSING DOCUMENTATION (ROUTING DOCUMENTS AND PROCESS SPECIFICATIONS) TO LILE FOR FINAL REVIEW BEFORE PRODUCTION BEGINS.

PREPARED BY	SYMBOL	DATE
CAROL HYER	LGMPM	8 Mar 03

SOURCE QUALIFICATION REQUIREMENTS
(PL98-525, SECTION 2319)

STOCK NR (NSN)«1620-01-071-0534»
NOUN: « CYL ASSY, INNER SHOCK STRUT, NLG »

PART NUMBER (P/N)« 2006644-103»
AIRCRAFT:« F-16»

SECTION C

QUALIFICATION REQUIREMENTS THAT MUST BE SATISFIED TO BECOME A QUALIFIED SOURCE:

1. Because of the need for uninterrupted item support to military aircraft systems while keeping with the requirements of PL 98-525, the current acquisition need not and generally will not be delayed to provide an offeror an opportunity to qualify. Normal acquisition practices at OO-ALC should preclude the denial of opportunity to any interested offeror.

2. The offeror must provide a pre-contract award qualification article, which meets the requirements of the engineering drawings, material specifications, and process specifications. However, successful completion of the qualification testing does not guarantee any contract award. If the offeror is deemed qualified and awarded the contract, a post-contract award first ariticle exhibit may be required to verify production capability.

3. The qualification article will be subjected to form, fit, and function verification as well as required testing to assure compliance with data list and other applicable procurement criteria. The qualification article shall demonstrate full compatibility and comparability with existing parts.

4. The required materials will be procured from a qualified source and shall meet the requirements of their respective specifications. The offeror will assure that the supplier has accomplished this and shall submit certified documentation of accomplishment of the above requirements to the purchaser along with the pre-contract award qualification article.

5. The required forgings shall be procured from the qualified forging source using the original certified forging procedures and dies. Forging material and lot qualifications shall be accomplished as required in the specified forging drawing, P/N «2006644-103» and specification SAE AMS-F-7190. The offeror shall assure that this is or has been accomplished by the forging source and will submit certified documentation of accomplishment of the above requirements to the government along with the pre-contract award qualification article.

6. The qualification article once submitted will become subject to such testing as deemed necessary by the U.S. Government to prove that the article meets all dimensional, processing and functional requirements. Such testing may result in the destruction of the article. Following completion of necessary testing and evaluation, the article no matter what its condition shall be returned to the contractor or disposed of at his discretion and direction whether it was found acceptable or not.

7. Form verification: The U.S. Government's Quality Verification Center (QVC) will be used to insure compliance with the dimensional requirements of the article. Material and processing compliance will also be verified as required.

8. Fit/function verification: Existing components and government test stands and fixtures will be utilized to verify physical interface and functional performance of articles.

9. Testing for material and process compliance.

(a) Material analysis
(b) Heat treat
(c) Grinding
(d) Plating
(e) Finish
(f) Grain flow
(g) Other

SOURCE QUALIFICATION REQUIREMENTS
(PL98-525, SECTION 2319)

STOCK NR (NSN)« 1620-01-071-0534»
NOUN: « CYL ASSY, INNER SHOCK STRUT, NLG »

PART NUMBER (P/N)« 2006644-103»
AIRCRAFT:« F-16»

10. Remarks:

a. Organic verification capabilities exist at OO-ALC.

b. Testing requirements outside organic capabilities will be contracted out.

11. The estimated cost of government testing and evaluation is $«5000.00».

12. Maximum time for testing of the qualification article will not exceed 30 days from receipt at testing agency.

SECTION D

QUALIFICATION WAIVER REQUIREMENTS.

1. An offerer who has had previous experience in the manufacture and qualification of items, which can be correlated with this product, may apply to the design control authority at OO-ALC for a waiver of the above stated qualification requirements.

a. The qualification waiver criteria utilized by the design control authority to perform a qualification analysis are available upon request. The qualification waiver criteria may be used as a guide in preparing the offerer's written input to the design control authority.

b. The burden of proof for written inputs is on the offerer. The design control authority will not pursue authenticity verification of claims made by the offerer of product manufacturing experience with other Government or non-Government agencies. Unsubstantiated claims will not be considered in the waiver analysis process.

c. This waiver will be granted if and only if the design control authority (LILE) can establish the qualifications of the offerer through the evaluation of written inputs from the offerer or from previous knowledge of the offerer's capabilities or from previous experience with the offerer on similar item acquisitions. If there is any doubt about the offerer's capability, the offerer will be required to submit a pre-qualification article. There is no guarantee of qualification by similarity. LILE reserves the right to require a pre-qualification article of all offerers.

2. The current acquisition need not and will not be delayed in order to provide an offerer with an opportunity to meet the requirements for qualification waiver.

3. Maximum time for approval of qualification by similarity will not exceed 15 days.

REVISION: 06

ENGINEERING DATA LIST

* HISTORY *

DATE : 20FEB03	DATA TECH : SSF	ORGN SYMBOL : LGMPM	PR NR :	APPLICATION: F-5	PAGE 1 OF 1

CAGE: 76823	MANUFACTURER NAME: NORTHROP GRUMMAN CORP EL SEGUNDO CA	REFERENCE NR: 14-40602-7	NOUN : CYLINDER AND PISTON	NSN : 1620011349231

CAGE	DRAWING NUMBER	REV	NR SHEETS	NR CARDS	FURN CODE	DIST CODE	NOUN	REQUIREMENTS
76823	14-40602 /	K	0000	0000	S		CYLINDER, STRUT, MLG	
	/E68492							EO
	/01A0653							ECO
76823	14-40622 /		0000	0000	S		BUSHING, SLEEVE	
76823	14-40632 /		0000	0000	S		BUSHING, SLEEVE	
76823	14-40636 /	A	0000	0000	S		BUSHING, SLEEVE	
76823	14-40642 /	A	0000	0000	S		BUSHING, SLEEVE	
76823	6-40637 /	D	0000	0000	S		BUSHING - LARGE	
	/82C293							ECO
76823	6-40638 /	D	0000	0000	S		BUSHING - SMALL	
	/F04354							EO

STANDARD ENGINEERING TEXT

ALL GOVERNMENT/MILITARY SPECIFICATIONS AND STANDARDS WILL NOT BE FURNISHED.
TO OBTAIN THESE SPECS AND STDS WRITE TO:
DODSSP
BUILDING 4/SECTION D
700 ROBINS AVE.
PHILADELPHIA PA. 19111-5098
TELEPHONE: (215) 697-2179
FAX: (215) 697-1462 TO VIEW OR ORDER: HTTP://WWW.DODSSP.DAPS.MIL

ENGINEERING DATA LIST REMARKS

FURNISHED METHOD CODE LEGEND:

C - CLASSIFIED DOCUMENT.
S - FURNISHED WITH SOLICITATION.
M - STABLE BASE DRAWING REQUIRED; FURNISHED WITH CONTRACT [illegible]
X - DATA SUPPLIED (NOT IN EDCARS).
R - FURNISHED BY PCD UPON REQUEST.
P - PARTIAL DOCUMENT FURNISHED.
V - VENDOR DRAWING; [illegible]
G - GOV'T DOCUMENT.
O - OTHERS, CONTRACTOR MUST ACQUIRE.
A - DATA NOT

REV:	ENGINEERING DATA REQUIREMENTS *(ATTACHMENT "A")*

NOTE: MILITARY SPECIFICATIONS I/STANDARDS WILL NOT BE FURNISHED IN THE BID SET.

1. THE FOLLOWING INSTRUCTIONS ARE FURNISHED FOR THE MANUFACTURE OF

CYLINDER, STRUT, MLG

2. PART NUMBER	3. NATIONAL STOCK NUMBER
14-40602-7	1620-01-134-9231

4. THE FOLLOWING SPECIFICATIONS/STANDARDS, ETC., WILL BE USED IN LIEU OF THE DATA INDICATED. THE SUPERSEDED DATA WILL NOT BE FURNISHED UNLESS SO INDICATED.

5. PER DRAWING REQUIREMENTS, PERFORM FLUORESCENT PENETRANT INSPECTION PER ASTM E 1417, TYPE I, METHOD B OR C, LEVEL 3 OR 4 IN LIEU OF MIL-I-6866 WITH THE FOLLOWING ACCEPTANCE/REJECTION CRITERIA: **NO DEFECTS ALLOWED**. THE INTENT OF **NO DEFECTS ALLOWED** IS THAT THE INSPECTION IS CONDUCTED AT THE REQUIRED SENSITIVITY LEVEL AND THERE SHALL BE NO INDICATIONS ALLOWED. THE INSPECTOR PERFORMING THE INSPECTION SHALL BE CERTIFIED TO LEVEL II WITH THE INSPECTION PROCEDURE DEVELOPED BY A LEVEL III AS SPECIFIED IN NAS-410.

6. PER DRAWING REQUIREMENTS, PERFORM MAGNETIC PARTICLE INSPECTION PER ASTM E 1444 IN LIEU OF MIL-I-6868. USE FULL WAVE DIRECT CURRENT (FWDC), WET CONTINUOUS METHOD, FLUORESCENT TYPE WITH THE FOLLOWING ACCEPTANCE/REJECTION CRITERIA: **NO DEFECTS ALLOWED**. THE INTENT OF **NO DEFECTS ALLOWED** IS THAT THE INSPECTION IS CONDUCTED AT THE REQUIRED SENSITIVITY LEVEL AND THERE SHALL BE NO INDICATIONS ALLOWED. THE INSPECTOR PERFORMING THE INSPECTION SHALL BE CERTIFIED TO LEVEL II WITH THE INSPECTION PROCEDURE DEVELOPED BY A LEVEL III AS SPECIFIED IN NAS 410.

7. PER DRAWING REQUIREMENTS, MARK AND IDENTIFY PER MIL-STD-130 IN LIEU OF IM-8 AND IM-24.

8. PER DRAWING REQUIREMENTS, HEAT TREAT ALUMINUM ALLOYS PER SAE AMS-H-6088 IN LIEU OF HT9.2.

9. PER DRAWING REQUIREMENTS, HEAT TREAT PER SAE AMS-H-6875 IN LIEU OF HT-17, HT-21 AND HT-22.

10. PER DRAWING REQUIREMENTS, FINISH PER MIL-C-16173 GR 1 OR 2 IN LIEU OF NFS 76.

11. PER DRAWING 6-40638, MATERIAL PER ASTM B196, B197, B194 IN LIEU OF NAI-1255 AND QQ-C-530.

12. PER DRAWING 6-40637 ECO 82C293, MATERIAL PER SAE AMS 4881 IN LIEU OF NAI-1255.

13. PER DRAWINGS 14-40636, 14-40622 AND 14-40642, MATERIAL PER SAE AMS-S-6758 COND. D1 IN LIEU OF MIL-S-6758 COND. D1.

14. PER DRAWING 14-40632, MATERIAL PER SAE AMS-QQ-S-763 IN LIEU OF QQ-S-763.

15. PER DRAWING REQUIREMENTS, CADMIUM PLATE PER SAE AMS-QQ-P-416 TYPE II, CL 3 FOR HEAT TREAT UNDER 180,000 PSI. OVER 180,000 PSI USE MIL-STD-870 TYPE II CL 2 IN LIEU OF STF0173, STF0175 AND FP-2.

16. USE SAE AMS-A-22771 IN LIEU OF MP-314 AND NAI 1306.

17. TOUCH UP BY USING THE FOLLOWING IN LIEU OF STF0273:
SAE AMS-C-5541 IN LIEU OF FP-28, PRIMER PER MIL-PRF-23377 IN LIEU OF FP-80 AND CHROME ACID BRUSH PER SAE AMS-M-3171 TYPE IV IN LIEU OF F-5.3.

PREPARED BY	SYMBOL	DATE
JOAN HYATT	LGMPM	11 Oct 01

REV:	ENGINEERING DATA REQUIREMENTS CONTINUATION SHEET *(ATTACHMENT "A")*
PART NUMBER 14-40602-7	NATIONAL STOCK NUMBER 1620-01-134-9231

18. APPLY FINISH SYSTEM IN SEQUENCE IN LIEU OF STF0337:
SULFURIC ACID ANODIZE PER SAE AMS-A-8625 TYPE II CL 1.
CORROSION PREVENTATIVE COMPOUND PER MIL-C-16173 GRADE 2.

19. APPLY ONE COAT EPOXY WATERBORNE PRIMER PER MIL-PRF-85582 TYPE 1, CL 2. ALTERNATE ONE COAT OF EPOXY POLYAMIDE PRIMER PER MIL-PRF-23377 TYPE 1. APPLY TWO TOPCOATS POLYURETHANE PER MIL-PRF-85285 TYPE I, COLOR NUMBER 17925 (WHITE) PER FED-STD-595 IN LIEU OF STF0120, WHICH HAS BEEN CANCELLED.

20. THREADS PER MIL-S-007742 IN LIEU OF FH-32.

21. PASSIVATE PER SAE AMS-QQ-P-35 IN LIEU OF STF0168.

22. PRESERVATION, PACKING, HANDLING AND STORAGE PER MIL-C-81309 IN LIEU OF P6968.

23. SERIAL NUMBER SHALL BE VIBROPEENED (WITH VIBRATING PNEUMATIC PENCIL) IN 0.09" LETTERS 0.004" - 0.007" DEEP IN THE LOCATION INDICATED. IF THE DRAWING DOES NOT INDICATE A LOCATION, OO-ALC/LILE SHALL PROVIDE S/N LOCATION INSTRUCTIONS. SERIALIZATION OF ITEM SHALL BE ACCOMPLISHED AS FOLLOWS: THE SERIALIZATION SHALL BEGIN WITH THE CAGE (FSCM) OF THE CONTRACTOR NAMED ON THE CONTRACT, FOLLOWED BY A DASH AND THE 2 DIGIT YEAR OF MANUFACTURE, FOLLOWED BY A DASH AND A SEQUENTIALLY UNIQUE 3 DIGIT NUMBER. A CONTRACTOR WHO RECEIVES NUMEROUS INTERMITTENT CONTRACTS SHALL START SERIALIZATION OF ITEM WITH THE NEXT NUMBER IN SEQUENCE OF THE PRIOR CONTRACT. IF A CONTRACT PRODUCES MORE THAN 999 ITEMS, THE SERIAL NUMBER SHOULD BEGIN USING 4 DIGIT SERIAL NUMBERS. THE SERIAL NUMBER SHOULD APPEAR LIKE THIS: "S/N 98747-01-001".

24. APPLY A THING UNIFORM COATING OF PRIMER PER MIL-PRF-23377 OR MIL-PRF-85582 AFTER CADMIUM PLATING TO ALL BUSHING BORES AND ALLOW TO FULLY CURE PRIOR TO INSTALLATION OF BUSHING . PRIMER SHALL NOT OBSTRUCT GREASE PASSAGES.

25. INSTALL BUSHINGS PER THE FOLLOWING IN LIEU OF MA-103:

A. THE BUSHING INSTALLATIONS SHALL BE ACCOMPLISHED IN SUCH A MANNER AS TO AVOID DAMAGE TO THE FINISH ON THE I.D. OF THE HOUSING INTO WHICH THE BUSHING IS INSTALLED, OR THE FINISH OF THE O.D. OF THE BUSHING. FORCED INSTALLATION OF SUB-ZERO INSTALLATIONS, SUCH AS THE USE OF A PRESS OR HAMMER IS NOT PERMITTED, AND IS NOT ACCEPTABLE. A SMALL NON-METALLIC HAMMER MAY BE USED TO TAP THE BUSHING INTO ALIGNMENT WITH THE HOUSING BORE, OR TO SEAT THE BUSHING.

B. PRIOR TO BUSHING INSTALLATION, THE PARTS AND HOUSING BORE SHALL BE CLEANED WITH A CLEANING SOLVENT TO REMOVE ALL CONTAMINATION.

C. LIQUID NITROGEN SHALL BE USED FOR ALL SUB-ZERO INSTALLATIONS UNLESS SOME OTHER SUB-ZERO COOLANT IS SPECIFIED, AND APPROVED BY OO-ALC/LILE ENGINEERING. THE SOAK TIME OF THE BUSHING IN THE LIQUID NITROGEN SHALL BE SUFFICIENT TO ALLOW THE BUSHING TO REACH THE SAME TEMPERATURE AS THE COOLANT.

PREPARED BY	SYMBOL	DATE
JOAN HYATT	LGMPM	11 Oct 01

D. THE BUSHING SHALL BE INSTALLED INTO THE HOUSING IMMEDIATELY UPON REMOVAL FROM THE COOLANT WITH AN ABSOLUTE MINIMUM OF LOST TIME. TRIAL RUNS SHALL BE ACCOMPLISHED AS NECESSARY TO MINIMIZE INSTALLATION TIME WHICH SHOULD BE IN THE ORDER OF ABOUT SEVEN (7) SECONDS MAXIMUM.

E. IT MAY OCCASIONALLY BE NECESSARY TO HEAT THE HOUSING INTO WHICH THE BUSHING IS TO BE INSTALLED, IN ADDITION TO SUB-ZERO COOLING OF THE BUSHING. DETAIL PARTS IN PROCESS, WILL NOT HAVE PAINT OR SEALANT OR OTHER ORGANIC MATERIAL APPLIED PRIOR TO HEATING, THE PARTS SHALL BE HEATED BY THE USE OF RADIANT HEAT TECHNIQUES, SUCH AS THERMAL BLANKETS, INFRARED LAMPS ETC.; TO THE MAXIMUM TEMPERATURE OF 250 F. TEMPERATURE MEASURING DEVICES SHALL BE USED TO MONITOR HEAT AND SHALL BE LOCATED ON AREAS OF THE PART EXPECTED TO REACH MAXIMUM TEMPERATURE. NO SCALING, OXIDATION, OR CORROSION SHALL BE PERMITTED.

F. BUSHINGS WITHOUT FLANGES SHALL BE INSTALLED INTO HOUSING BORE WHICH HAS RECEIVED A LIGHT COAT OF SEALANT PER MIL-PRF-81733. INSTALL SHRUNKEN BUSHING AND WIPE OFF ANY EXCESS SEALANT THAT MAY HAVE EXTRUDED AROUND THE PERIPHERY OF BOTH ENDS OF THE BUSHINGS.

G. BUSHINGS WITH FLANGES SHALL BE INSTALLED IN A SIMILAR MANNER AS PARAGRAPH (F) EXCEPT SEALANT SHALL ALSO BE APPLIED TO FACE OF LUG UNDER FLANGE. SEALANT SHALL BE APPLIED IN SUCH A MANNER AS TO ENSURE COMPLETE COVERAGE OF INSIDE FACE OF BUSHING FLANGE WHEN BUSHING IS INSTALLED. WIPE OFF ANY EXCESS SEALANT AROUND PERIPHERY OF BUSHING FLANGE. WIPE ANY EXCESS SEALANT FROM OTHER END OF BUSHING ALSO.

H. FOR BUSHINGS WITH EXTERNAL GREASE GROOVES, THE INSIDE OF THE LUG WILL BE COATED WITH MIL-C-16173 PRIOR TO BUSHING INSTALLATION AND FACE OF LUG WILL BE COATED WITH MIL-PRF-81733 PER PARAGRAPH G, IF BUSHING IS FLANGED.

26. THE FORGING SHALL BE PROCURED FROM THE ORIGINAL FORGING SOURCE, USING THE ORIGINAL CERTIFIED FORGING PROCEDURES AND DIES/TOOLING.

A. PRIOR TO CONTRACT AWARD, THE DETAILED PART BIDDER SHALL PROVIDE CERTIFICATION FROM THE FORGING SOURCE, TO THE GOVERNMENT THAT THE CERTIFIED DIES AND PROCEDURES ARE AVAILABLE AND THE FORGING SOURCE HAS AN AGREEMENT WITH THE DETAIL PARTS BIDDER TO PROVIDE FORGINGS FOR THEIR USE IN THE EVENT THEY ARE THE SUCCESSFUL BIDDER.

B. PRIOR TO PRODUCTION, FORGING LOT QUALIFICATION SHALL BE ACCOMPLISHED AS SPECIFIED ON THE FORGING DRAWING AND SAE AMS-F-7190 FOR STEEL FORGINGS AND SAE AMS-A-22771 FOR ALUMINUM FORGINGS. THE DETAILED PART CONTRACTOR SHALL ASSURE THAT THIS HAS BEEN ACCOMPLISHED BY THE FORGING SOURCE AND SHALL SUBMIT CERTIFIED DOCUMENTATION OF ACCOMPLISHMENT TO THE GOVERNMENT.

REV:	ENGINEERING DATA REQUIREMENTS CONTINUATION SHEET *(ATTACHMENT "A")*

PART NUMBER	NATIONAL STOCK NUMBER
14-40602-7	1620-01-134-9231

27. THE FORGING SHALL BE PROCURED FROM THE ORIGINAL FORGING SOURCE, USING THE ORIGINAL CERTIFIED FORGING PROCEDURES AND DIES.

A. PRIOR TO CONTRACT AWARD, THE DETAILED PART BIDDER SHALL PROVIDE CERTIFICATION FROM THE FORGING SOURCE, TO THE GOVERNMENT THAT THE CERTIFIED DIES AND PROCEDURES ARE AVAILABLE AND THE FORGING SOURCE HAS AN AGREEMENT WITH THE DETAIL PARTS BIDDER TO PROVIDE FORGINGS FOR THEIR USE IN THE EVENT THEY ARE THE SUCCESSFUL BIDDER.

B. PRIOR TO PRODUCTION, FORGING LOT QUALIFICATION SHALL BE ACCOMPLISHED AS SPECIFIED ON THE FORGING DRAWING AND SAE AMS-A-22771 IN LIEU OF NAI-1306 FOR ALUMINUM FORGINGS. THE DETAILED PART CONTRACTOR SHALL ASSURE THAT THIS HAS BEEN ACCOMPLISHED BY THE FORGING SOURCE AND SHALL SUBMIT CERTIFIED DOCUMENTATION OF ACCOMPLISHMENT TO THE GOVERNMENT.

28. FORGING SOURCE, CONTROL AND LOCATION OF DIES:

A. FORGING DRAWING: 14-40602-1-3-5F

B. DIE #: 6796

C. CONTROL OF FORGING PROCESS: NORTHROP

D. LOCATION OF FORGING DIES:

KAISER ALUMINUM
1001 MCWANE BLVD.
P.O. BOX 2398
OXNARD, CA 93034
(805) 488-4401
CAGE: 28317

29. IF FORGING SOURCE IS NOT IDENTIFIED PRIOR TO CONTRACT AWARD, THE CONTRACTOR SHALL ADVISE THE GOVERNMENT IN WRITING OF THE INTENT TO PROCURE NEW FORGING DIES AND THE PROPOSED FORGING SOURCE. THE CONTRACTOR SHALL NOT PROCEED TO OBTAIN NEW FORGINGS DIES WITHOUT THE EXPRESS WRITTEN CONSENT OF THE GOVERNMENT-PROCURING ACTIVITY. THE GOVERNMENT SHALL HAVE UNLIMITED USE OF THE DIES DEVELOPED UNDER THIS CONTRACT. THE CONTRACTOR SHALL INFORM THE FORGING HOUSE IN WRITING, AT THE SAME TIME OF THE ORDER FOR THE DIES IS PLACED, THAT THE GOVERNMENT HAS UNLIMITED USE RIGHTS OF THE DIES AND FORWARD A COPY OF THIS LETTER TO THE GOVERNMENT CONTRACTING OFFICER.

PREPARED BY	SYMBOL	DATE
JOAN HYATT	LGMPM	11 Oct 01

REV:	ENGINEERING DATA REQUIREMENTS CONTINUATION SHEET *(ATTACHMENT "A")*

PART NUMBER	NATIONAL STOCK NUMBER
14-40602-7	1620-01-134-9231

30. AFTER CONTRACT AWARD, THE SUCCESSFUL BIDDER SHALL PROVIDE A COPY OF THE PROCESSING DOCUMENTATION (ROUTING DOCUMENTS AND PROCESS SPECIFICATIONS) TO LILE FOR FINAL REVIEW BEFORE PRODUCTION BEGINS.

31. OO-ALC/LILE SYSTEM ENGINEERING RETAINS ALL RIGHTS TO REVIEW AND ACCEPT MRB'S PRIOR TO SHIPMENT OF DISCREPANT ITEMS. ALL DEVIATIONS, MINOR AND MAJOR, FROM THE ENGINEERING DRAWING PACKAGE WILL BE SUBMITTED FOR MRB DISPOSITION.

32. PRIOR TO CONTRACT AWARD, THE CONTRACTOR WILL CERTIFY TO THE GOVERNMENT IN WRITING FULL COMPLIANCE WITH MANUALS, SPECIFICATIONS, AND STANDARDS CALLED OUT AND REQUIRED FOR THE MANUFACTURE OF THIS CONTRACTED LANDING GEAR COMPONENT/ASSEMBLY. CONTRACTOR IS RESPONSIBLE TO COMPLETELY SEARCH THESE MANUALS, SPECIFICATIONS, AND STANDARDS AND FULLY UNDERSTAND THE REQUIREMENTS NECESSARY TO MANUFACTURE LANDING GEAR COMPONENTS. ANY QUESTIONS CAN BE FORWARDED TO THIS OFFICE OO-ALC/LILE.

PREPARED BY	SYMBOL	DATE
JOAN HYATT	LGMPM	11 Oct 01

SOURCE QUALIFICATION REQUIREMENTS
(PL98-525, SECTION 2319)

STOCK NR (NSN) 1620 01 134 9231 PART NUMBER (P/N) 14-40602-7
NOUN: Cylinder, Strut, MLG AIRCRAFT: F-5

SECTION C

QUALIFICATION REQUIREMENTS THAT MUST BE SATISFIED TO BECOME A QUALIFIED SOURCE:

1. Because of the need for uninterrupted item support to military aircraft systems while keeping with the requirements of PL 98-525, the current acquisition need not and generally will not be delayed to provide an offeror an opportunity to qualify. Normal acquisition practices at OO-ALC should preclude the denial of opportunity to any interested offeror.

2. The offeror must provide a pre-contract award qualification article, which meets the requirements of the engineering drawings, material specifications, and process specifications. However, successful completion of the qualification testing does not guarantee any contract award. If the offeror is deemed qualified and awarded the contract, a post-contract award first ariticle exhibit may be required to verify production capability.

3. The qualification article will be subjected to form, fit, and function verification as well as required testing to assure compliance with data list and other applicable procurement criteria. The qualification article shall demonstrate full compatibility and comparability with existing parts.

4. The required materials will be procured from a qualified source and shall meet the requirements of their respective specifications. The offeror will assure that the supplier has accomplished this and shall submit certified documentation of accomplishment of the above requirements to the purchaser along with the pre-contract award qualification article.

5. The required forgings shall be procured from the qualified forging source using the original certified forging procedures and dies. Forging material and lot qualifications shall be accomplished as required in the specified forging drawing, P/N 14-40602-7 and specification MIL-A-22771. The offeror shall assure that this is or has been accomplished by the forging source and will submit certified documentation of accomplishment of the above requirements to the government along with the pre-contract award qualification article.

6. The qualification article once submitted will become subject to such testing as deemed necessary by the U.S. Government to prove that the article meets all dimensional, processing and functional requirements. Such testing may result in the destruction of the article. Following completion of necessary testing and evaluation, the article no matter what its condition shall be returned to the contractor or disposed of at his discretion and direction whether it was found acceptable or not.

7. Form verification: The U.S. Government's Quality Verification Center (QVC) will be used to insure compliance with the dimensional requirements of the article. Material and processing compliance will also be verified as required.

8. Fit/function verification: Existing components and government test stands and fixtures will be utilized to verify physical interface and functional performance of articles.

9. Testing for material and process compliance.
   (a) Material analysis
   (b) Heat treat
   (c) Grinding
   (d) Plating
   (e) Finish
   (f) Grain flow
   (g) Other

SOURCE QUALIFICATION REQUIREMENTS
(PL98-525, SECTION 2319)

STOCK NR (NSN) 1620 01 134 9231 PART NUMBER (P/N) 14-40602-7
NOUN: Cylinder, Strut, MLG AIRCRAFT: F-5

10. Remarks:

a. Organic verification capabilities exist at OO-ALC.

b. Testing requirements outside organic capabilities will be contracted out.

11. The estimated cost of government testing and evaluation is $15000.00.

12. Maximum time for testing of the qualification article will not exceed 30 days from receipt at testing agency.

SECTION D

QUALIFICATION WAIVER REQUIREMENTS.

1. An offerer who has had previous experience in the manufacture and qualification of items, which can be correlated with this product, may apply to the design control authority at OO-ALC for a waiver of the above stated qualification requirements.

a. The qualification waiver criteria utilized by the design control authority to perform a qualification analysis are available upon request. The qualification waiver criteria may be used as a guide in preparing the offerer's written input to the design control authority.

b. The burden of proof for written inputs is on the offerer. The design control authority will not pursue authenticity verification of claims made by the offerer of product manufacturing experience with other Government or non-Government agencies. Unsubstantiated claims will not be considered in the waiver analysis process.

c. This waiver will be granted if and only if the design control authority (LILE) can establish the qualifications of the offerer through the evaluation of written inputs from the offerer or from previous knowledge of the offerer's capabilities or from previous experience with the offerer on similar item acquisitions. If there is any doubt about the offerer's capability, the offerer will be required to submit a pre-qualification article. There is no guarantee of qualification by similarity. LILE reserves the right to require a pre-qualification article of all offerers.

2. The current acquisition need not and will not be delayed in order to provide an offerer with an opportunity to meet the requirements for qualification waiver.

3. Maximum time for approval of qualification by similarity will not exceed 15 days.

REVISION: *03*

ENGINEERING DATA LIST

* HISTORY *

DATE : 17JUN02	DATA TECH : SJH	ORGN SYMBOL : LGMPM	PR NR :	APPLICATION: F-5	PAGE 1 OF 1

CAGE: 76823	MANUFACTURER NAME: NORTHROP GRUMMAN CORP EL SEGUNDO CA	REFERENCE NR: 14-41607-3	NOUN : CYLINDER,LANDING GE	NSN : 1620001275785

CAGE	DRAWING NUMBER	REV	NR SHEETS	NR CARDS	FURN CODE	DIST CODE	NOUN	REQUIREMENTS
76823	14-41607 /	B	0000	0000	S		CYLINDER	
	/99C0071							ECO

STANDARD ENGINEERING TEXT

ENGINEERING DATA LIST REMARKS

FURNISHED METHOD CODE LEGEND:

C - CLASSIFIED DOCUMENT.
S - FURNISHED WITH SOLICITATION.
M - STABLE BASE DRAWING REQUIRED; FURNISHED WITH CONTRACT AWARD
X - DATA SUPPLIED (NOT IN EDCARS).
R - FURNISHED BY PCD UPON REQUEST.
P - PARTIAL DOCUMENT FURNISHED.
V - VENDOR DRAWING; (NOT PROVIDED)
G - GOV'T DOCUMENT.
O - OTHERS, CONTRACTOR MUST ACQUIRE.
A - DATA NOT

REV:	ENGINEERING DATA REQUIREMENTS *(ATTACHMENT "A")*

NOTE: MILITARY SPECIFICATIONS I/STANDARDS WILL NOT BE FURNISHED IN THE BID SET.

1. THE FOLLOWING INSTRUCTIONS ARE FURNISHED FOR THE MANUFACTURE OF

CYLINDER, CYLINDER & PISTON ASSEMBLY - NOSE LANDING GEAR

2. PART NUMBER	3. NATIONAL STOCK NUMBER
14-41607-3	1620-00-127-5785

4. THE FOLLOWING SPECIFICATIONS/STANDARDS, ETC., WILL BE USED IN LIEU OF THE DATA INDICATED. THE SUPERSEDED DATA WILL NOT BE FURNISHED UNLESS SO INDICATED.

5. MARKING AND IDENTIFICATION PER MIL-STD-130 IN LIEU OF IM-24.

6. PER DRAWING REQUIREMENTS, SERIAL NUMBER SHALL BE VIBROPEENED (WITH VIBRATING PNEUMATIC PENCIL) IN 0.09" LETTERS 0.004" - 0.007" DEEP IN THE LOCATION INDICATED. IF THE DRAWING DOES NOT INDICATE A LOCATION, OO-ALC/LILE SHALL PROVIDE S/N LOCATION INSTRUCTIONS. SERIALIZATION OF ITEM SHALL BE ACCOMPLISHED AS FOLLOWS: THE SERIALIZATION SHALL BEGIN WITH THE CAGE (FSCM) OF THE CONTRACTOR NAMED ON THE CONTRACT, FOLLOWED BY A DASH AND THE 2 DIGIT YEAR OF MANUFACTURE, FOLLOWED BY A DASH AND A SEQUENTIALLY UNIQUE 3 DIGIT NUMBER. A CONTRACTOR WHO RECEIVES NUMEROUS INTERMITTENT CONTRACTS SHALL START SERIALIZATION OF ITEM WITH THE NEXT NUMBER IN SEQUENCE OF THE PRIOR CONTRACT. IF A CONTRACT PRODUCES MORE THAN 999 ITEMS, THE SERIAL NUMBER SHOULD BEGIN USING 4 DIGIT SERIAL NUMBERS. THE SERIAL NUMBER SHOULD APPEAR LIKE THIS: "S/N 98747-02-001".

7. PER DRAWING REQUIREMENTS, PERFORM MAGNETIC PARTICLE INSPECTION PER ASTM E 1444 IN LIEU OF IT-61. USE FULL WAVE DIRECT CURRENT (FWDC), WET CONTINUOUS METHOD, FLUORESCENT TYPE WITH THE FOLLOWING ACCEPTANCE/REJECTION CRITERIA: NO DEFECTS ALLOWED. THE INTENT OF NO DEFECTS ALLOWED IS THAT THE INSPECTION IS CONDUCTED AT THE REQUIRED SENSITIVITY LEVEL AND THERE SHALL BE NO INDICATIONS ALLOWED. THE INSPECTOR PERFORMING THE INSPECTION SHALL BE CERTIFIED TO LEVEL II WITH THE INSPECTION PROCEDURE DEVELOPED BY A LEVEL III AS SPECIFIED IN NAS-410.

8. MATERIAL PER SAE AMS 6425 IN LIEU OF NAI-1274 AND NAI-1275.

9. DIMENSIONS AND TOLERANCES PER ASME Y14.5 IN LIEU OF 3-40500 AND 20Y201.

10. THREADS PER MIL-S-8879 IN LIEU OF FH-32.

11. HEAT TREAT PER SAE AMS-H-6875 IN LIEU OF HT-22.

12. FOR PARTS HEAT-TREATED TO 180 KSI AND ABOVE, ANY SURFACE GROUND/MACHINED AFTER HEAT TREAT SHALL BE INSPECTED FOR ABUSIVE GRINDING/MACHINING BURNS PER MIL-STD-867. GRINDING SHALL BE PER MIL-STD-866.

PREPARED BY	SYMBOL	DATE
JOAN HYATT	LGMPM	26 Jun 02

REV:	ENGINEERING DATA REQUIREMENTS CONTINUATION SHEET *(ATTACHMENT "A")*

PART NUMBER	NATIONAL STOCK NUMBER
14-41607-3	1620-00-127-5785

13. SHOT PEEN PER SAE AMS -S-13165 IN LIEU OF MA-57.

14. PER NOTE 8 ON DRAWING, USE MIL-STD-1501 TYPE II CL 2 IN LIEU OF STF0352.

15. PER NOTE 9 ON DRAWING, USE MIL-STD-870 TYPE II CL 1 IN LIEU OF STF0180.

16. TEMPORARY PROTECTION PER MIL-C-16173 GR 3 OR 4 IN LIEU OF FP-68 GR 3.

17. MACHINE PARTS USING BEST SHOP PRACTICE IN LIEU OF MA-116.

18. AFTER CONTRACT AWARD, THE SUCCESSFUL BIDDER SHALL PROVIDE A COPY OF THE PROCESSING DOCUMENTATION (ROUTING DOCUMENTS AND PROCESS SPECIFICATIONS) TO LILE FOR FINAL REVIEW BEFORE PRODUCTION BEGINS.

19. OO-ALC/LILE SYSTEM ENGINEERING RETAINS ALL RIGHTS TO REVIEW AND ACCEPT MRB'S PRIOR TO SHIPMENT OF DISCREPANT ITEM. ALL DEVIATIONS, MINOR AND MAJOR, FROM THE ENGINEERING DRAWING PACKAGE WILL BE SUBMITTED FOR MRB DISPOSITION.

20. PRIOR TO CONTRACT AWARD, THE CONTRACTOR WILL CERTIFY TO THE GOVERNMENT IN WRITING FULL COMPLIANCE WITH MANUALS, SPECIFICATIONS, AND STANDARDS CALLED OUT AND REQUIRED FOR THE MANUFACTURE OF THIS CONTRACTED LANDING GEAR COMPONENTS/ASSEMBLIES. THE CONTRACTOR IS RESPONSIBLE TO COMPLETELY SEARCH THESE MANUALS, SPECIFICATIONS, AND STANDARDS AND FULLY UNDERSTAND THE REQUIREMENTS NECESSARY TO MANUFACTURE THESE COMPONENTS. ANY QUESTIONS CAN BE FORWARDED TO THIS OFFICE OO-ALC/LILE.

PREPARED BY	SYMBOL	DATE
JOAN HYATT	LGMPM	26 Jun 02

SOURCE QUALIFICATION REQUIREMENTS
(PL98-525, SECTION 2319)

STOCK NR (NSN) 1620-00-127-5785 PART NUMBER (P/N) 14-41607-3
NOUN: CYLINDER, NLG AIRCRAFT: F-5

SECTION C

QUALIFICATION REQUIREMENTS THAT MUST BE SATISFIED TO BECOME A QUALIFIED SOURCE:

1. Because of the need for uninterrupted item support to military aircraft systems while keeping with the requirements of PL 98-525, the current acquisition need not and generally will not be delayed to provide an offeror an opportunity to qualify. Normal acquisition practices at OO-ALC should preclude the denial of opportunity to any interested offeror.

2. The offeror must provide a pre-contract award qualification article, which meets the requirements of the engineering drawings, material specifications, and process specifications. However, successful completion of the qualification testing does not guarantee any contract award. If the offeror is deemed qualified and awarded the contract, a post-contract award first ariticle exhibit may be required to verify production capability.

3. The qualification article will be subjected to form, fit, and function verification as well as required testing to assure compliance with data list and other applicable procurement criteria. The qualification article shall demonstrate full compatibility and comparability with existing parts.

4. The required materials will be procured from a qualified source and shall meet the requirements of their respective specifications. The offeror will assure that the supplier has accomplished this and shall submit certified documentation of accomplishment of the above requirements to the purchaser along with the pre-contract award qualification article.

5. The required forgings shall be procured from the qualified forging source using the original certified forging procedures and dies. Forging material and lot qualifications shall be accomplished as required in the specified forging drawing, P/N 14-41607 and specification MIL-F-7190. The offeror shall assure that this is or has been accomplished by the forging source and will submit certified documentation of accomplishment of the above requirements to the government along with the pre-contract award qualification article.

6. The qualification article once submitted will become subject to such testing as deemed necessary by the U.S. Government to prove that the article meets all dimensional, processing and functional requirements. Such testing may result in the destruction of the article. Following completion of necessary testing and evaluation, the article no matter what its condition shall be returned to the contractor or disposed of at his discretion and direction whether it was found acceptable or not.

7. Form verification: The U.S. Government's Quality Verification Center (QVC) will be used to insure compliance with the dimensional requirements of the article. Material and processing compliance will also be verified as required.

8. Fit/function verification: Existing components and government test stands and fixtures will be utilized to verify physical interface and functional performance of articles.

9. Testing for material and process compliance.

(a) Material analysis
(b) Heat treat
(c) Grinding
(d) Plating
(e) Finish
(f) Grain flow
(g) Other

SOURCE QUALIFICATION REQUIREMENTS
(PL98-525, SECTION 2319)

STOCK NR (NSN) 1620-00-127-5785 PART NUMBER (P/N) 14-41607-3
NOUN: CYLINDER, NLG AIRCRAFT:F-5

10. Remarks:

a. Organic verification capabilities exist at OO-ALC.

b. Testing requirements outside organic capabilities will be contracted out.

11. The estimated cost of government testing and evaluation is $2000.00.

12. Maximum time for testing of the qualification article will not exceed 30 days from receipt at testing agency.

SECTION D

QUALIFICATION WAIVER REQUIREMENTS.

1. An offerer who has had previous experience in the manufacture and qualification of items, which can be correlated with this product, may apply to the design control authority at OO-ALC for a waiver of the above stated qualification requirements.

a. The qualification waiver criteria utilized by the design control authority to perform a qualification analysis are available upon request. The qualification waiver criteria may be used as a guide in preparing the offerer's written input to the design control authority.

b. The burden of proof for written inputs is on the offerer. The design control authority will not pursue authenticity verification of claims made by the offerer of product manufacturing experience with other Government or non-Government agencies. Unsubstantiated claims will not be considered in the waiver analysis process.

c. This waiver will be granted if and only if the design control authority (LILE) can establish the qualifications of the offerer through the evaluation of written inputs from the offerer or from previous knowledge of the offerer's capabilities or from previous experience with the offerer on similar item acquisitions. If there is any doubt about the offerer's capability, the offerer will be required to submit a pre-qualification article. There is no guarantee of qualification by similarity. LILE reserves the right to require a pre-qualification article of all offerers.

2. The current acquisition need not and will not be delayed in order to provide an offerer with an opportunity to meet the requirements for qualification waiver.

3. Maximum time for approval of qualification by similarity will not exceed 15 days.

REVISION: *01*

ENGINEERING DATA LIST

* HISTORY *

DATE :	DATA TECH :	ORGN SYMBOL :	PR NR :	APPLICATION:	PAGE
16APR03	SSF	LGMPM		F-5	1 OF 1

CAGE:	MANUFACTURER NAME:	REFERENCE NR:	NOUN :	NSN :
76823	NORTHROP GRUMMAN CORP EL SEGUNDO CA	14-40605-9	PISTON,LANDING GEAR	1620000071781

CAGE	DRAWING NUMBER	REV	NR SHEETS	NR CARDS	FURN CODE	DIST CODE	NOUN	REQUIREMENTS
98747	00-ALC/LGMPM /		0002	0000	S		ENGINEERING DATA REQMTS ATTACH A	
76823	14-40605 /	H	0000	0000	S		PISTON, STRUT MAIN LANDING GEAR	
76823	233007 /		0014	0000	S		FORGING & TOOLING POINTS	
76823	3-40500 /	F	0027	0000	S		MANUFACTURING TOLERANCES	
76823	3-40528 /	L	0000	0000	S		MARKINGS-LANDING GEAR	

STANDARD ENGINEERING TEXT

ALL GOVERNMENT/MILITARY SPECIFICATIONS AND STANDARDS WILL NOT BE FURNISHED.
TO OBTAIN THESE SPECS AND STDS WRITE TO:
DODSSP
BUILDING 4/SECTION D
700 ROBINS AVE.
PHILADELPHIA PA. 19111-5098
TELEPHONE: (215) 697-2179
FAX: (215) 697-1462 TO VIEW OR ORDER: HTTP://WWW.DODSSP.DAPS.MIL

ENGINEERING DATA LIST REMARKS

FURNISHED METHOD CODE LEGEND:

C - CLASSIFIED DOCUMENT.
S - FURNISHED WITH SOLICITATION.
M - STABLE BASE DRAWING REQUIRED; FURNISHED WITH CONTRACT AWARD
X - DATA SUPPLIED (NOT IN EDCARS).
R - FURNISHED BY PCD UPON REQUEST.
P - PARTIAL DOCUMENT FURNISHED.
V - VENDOR DRAWING; (NOT REQUIRED)
G - GOV'T DOCUMENT.
O - OTHERS, CONTRACTOR MUST ACQUIRE.
A - DATA NOT

REV:	ENGINEERING DATA REQUIREMENTS *(ATTACHMENT "A")*

NOTE: MILITARY SPECIFICATIONS I/STANDARDS WILL NOT BE FURNISHED IN THE BID SET.

1. THE FOLLOWING INSTRUCTIONS ARE FURNISHED FOR THE MANUFACTURE OF

PISTON, STRUT F-5

2. PART NUMBER	3. NATIONAL STOCK NUMBER
14-40605-9	**1620-00-007-1781**

4. THE FOLLOWING SPECIFICATIONS/STANDARDS, ETC., WILL BE USED IN LIEU OF THE DATA INDICATED. THE SUPERSEDED DATA WILL NOT BE FURNISHED UNLESS SO INDICATED.

5. OO-ALC/LGHLEN System Engineering retains all right to review and accept/reject MRB's prior to shipment of discrepant items. All deviations, minor and major, from the Engineering Drawing Package will be submitted for MRB disposition.

6. Prior to contract award, the contractor will certify to the government in writing, full compliance with manuals, specifications, and standards called out and required for the manufacture of this contracted landing gear component/assembly. Contractor is responsible to completely search these manuals, specifications, and standards and fully understand the requirements necessary to manufacture landing gear components. Any questions can be forwarded to this office OO-ALC/LGHLEN.

7. Surface Roughness per ASME B46.1.

8. Identification and Marking per MIL-STD-130, impression stamping not permitted, in lieu of PS IM-23.

9. Threads per MIL-S-7742, Safety Critical, in lieu of PS FH-32.

10. Machine using Best Aircraft Industry Shop Practices in lieu of PS MA-116.

11. Perform Magnetic Particle Inspection per ASTM E 1444, in lieu of PS IT-61. Use Type Full Wave Direct Current (FWDC), Wet Continuous Method, fluorescent type with the following acceptance/rejection criteria: NO DEFECTS ALLOWED. The intent of NO DEFECTS ALLOWED is that the inspection is conducted at the required sensitivity level and there shall be no indications allowed. The Inspector performing the Inspection will be certified to the Level II with the Inspection Procedure developed by a Level III as specified in NAS-410.

12. Shot Peen per SAE AMS 13165 all external surfaces except threads and internal surfaces marked per note #8 after machining, grinding, and stress relief but before plating in lieu of PS MA-57.

13. Heat Treat per MIL-H-6875 in lieu of HT-15.

14. On Parts Heat Treated 180 KSI and above, any surfaces Ground/Machined after Heat Treat will be inspected for abusive grinding/machine Burns Per MIL-STD-867. Grinding shall be per MIL-STD-866.

15. Cadmium Plate per MIL-STD-870, Class 1, Type II in lieu of STF 0180.

16. Apply one coat Epoxy Waterborne Primer per MIL-P-85582, Class 2, Type I in lieu of STF 0221. Alternate primer, one coat Epoxy - Polyamide per MIL-P-23377, Type I.

17. Apply two top coats Polyurethane per MIL-PRF-85285, Type I, color #17925 (White) per FED-STD-595 in lieu of STF 0195.

18. Chromium Plate per MIL-STD-1501, Type II Class 2, in lieu of STF 0352.

19. Apply Corrosion Preventative Compound per MIL-C-16173, Grade 2, in lieu of STF 0144.

PREPARED BY	SYMBOL	DATE
SANDI L. FIELD	**LGMPM**	20030418

REV:	ENGINEERING DATA REQUIREMENTS CONTINUATION SHEET *(ATTACHMENT "A")*
PART NUMBER **14-40605-9**	NATIONAL STOCK NUMBER **1620-00-007-1781**

20. Protect with FED-STD-242 prior to packaging for shipment in lieu of FED-STD-163.

21. Use SAE AMS 6257 or SAE AMS 6419 for 300 M Steel.

22. Serial Number shall be Vibropeened, or Steel Stamped, in 0.09" LETTERS 0.004" - 0.007" Deep in the location indicated. If the Drawing does not indicate a Location, OO-ALC/LGHLEN shall provide S/N Location Instructions. Serialization of item shall be accomplished as follows:

The Serialization shall begin with the CAGE (FSCM)of the Contractor named on the Contract, followed by a Dash and the 2 Digit year of Manufacture, followed by a dash and a sequentially unique 3 digit number. A Contractor who receives numerous intermittent contracts shall start Serialization of item with the next number in Sequence of the prior Contract. If a Contract produces more then 999 items, the Serial Number should begin using 4 Digit Serial Numbers. The Serial Number should appear like this: "S/N 98747-03-001".

23. FORGING REQUIREMENTS;

A. The required forging will be procured from the qualified forging source using the original forging procedures and dies/tooling.

1. Prior to contract award the detailed part bidder will provide certification, from the forging source, to the government that the certified dies and forging procedures are available and the forging source has an agreement with the detail part bidder to provide forgings for their use in the event they are the successful bidder.

2. Prior to production, forging lot qualification will be accomplished as specified on the forging drawing and MIL-F-7190 (Steel) in lieu of NAI-1271. The contractor will assure that this is or has been accomplished by the forging source and will submit certified documentation of accomplishment to the government.

B. FORGING SOURCE, CONTROL AND LOCATION OF DIES:

1. Forging drawing 14-40605-9
   Die Number: 7802

2. Control of Forging Processes: Northrop

3. Location of Forging Dies: Kropp Forge
   5301 W. Roosevelt Rd
   Cicero, Ill 60804

PREPARED BY	SYMBOL	DATE
SANDI L. FIELD	**LGMPM**	20030418

SOURCE QUALIFICATION REQUIREMENTS
(PL98-525, SECTION 2319)

STOCK NR (NSN)1620-00-007-1781 PART NUMBER (P/N)14-40605-9
NOUN: Piston, Strut MLG AIRCRAFT:F-5

SECTION C

QUALIFICATION REQUIREMENTS THAT MUST BE SATISFIED TO BECOME A QUALIFIED SOURCE:

1. Because of the need for uninterrupted item support to military aircraft systems while keeping with the requirements of PL 98-525, the current acquisition need not and generally will not be delayed to provide an offeror an opportunity to qualify. Normal acquisition practices at OO-ALC should preclude the denial of opportunity to any interested offeror.

2. The offeror must provide a pre-contract award qualification article, which meets the requirements of the engineering drawings, material specifications, and process specifications. However, successful completion of the qualification testing does not guarantee any contract award. If the offeror is deemed qualified and awarded the contract, a post-contract award first ariticle exhibit may be required to verify production capability.

3. The qualification article will be subjected to form, fit, and function verification as well as required testing to assure compliance with data list and other applicable procurement criteria. The qualification article shall demonstrate full compatibility and comparability with existing parts.

4. The required materials will be procured from a qualified source and shall meet the requirements of their respective specifications. The offeror will assure that the supplier has accomplished this and shall submit certified documentation of accomplishment of the above requirements to the purchaser along with the pre-contract award qualification article.

5. The required forgings shall be procured from the qualified forging source using the original certified forging procedures and dies. Forging material and lot qualifications shall be accomplished as required in the specified forging drawing, P/N 14-40605-9 and specification MIL-F-7190. The offeror shall assure that this is or has been accomplished by the forging source and will submit certified documentation of accomplishment of the above requirements to the government along with the pre-contract award qualification article.

6. The qualification article once submitted will become subject to such testing as deemed necessary by the U.S. Government to prove that the article meets all dimensional, processing and functional requirements. Such testing may result in the destruction of the article. Following completion of necessary testing and evaluation, the article no matter what its condition shall be returned to the contractor or disposed of at his discretion and direction whether it was found acceptable or not.

7. Form verification: The U.S. Government's Quality Verification Center (QVC) will be used to insure compliance with the dimensional requirements of the article. Material and processing compliance will also be verified as required.

8. Fit/function verification: Existing components and government test stands and fixtures will be utilized to verify physical interface and functional performance of articles.

9. Testing for material and process compliance.

(a) Material analysis
(b) Heat treat
(c) Grinding
(d) Plating
(e) Finish
(f) Grain flow
(g) Other

SOURCE QUALIFICATION REQUIREMENTS
(PL98-525, SECTION 2319)

STOCK NR (NSN)1620-00-007-1781 PART NUMBER (P/N)14-40605-9
NOUN: Piston, Strut MLG AIRCRAFT:F-5

10. Remarks:

a. Organic verification capabilities exist at OO-ALC.

b. Testing requirements outside organic capabilities will be contracted out.

11. The estimated cost of government testing and evaluation is $2,000.

12. Maximum time for testing of the qualification article will not exceed 30 days from receipt at testing agency.

SECTION D

QUALIFICATION WAIVER REQUIREMENTS.

1. An offerer who has had previous experience in the manufacture and qualification of items, which can be correlated with this product, may apply to the design control authority at OO-ALC for a waiver of the above stated qualification requirements.

a. The qualification waiver criteria utilized by the design control authority to perform a qualification analysis are available upon request. The qualification waiver criteria may be used as a guide in preparing the offerer's written input to the design control authority.

b. The burden of proof for written inputs is on the offerer. The design control authority will not pursue authenticity verification of claims made by the offerer of product manufacturing experience with other Government or non-Government agencies. Unsubstantiated claims will not be considered in the waiver analysis process.

c. This waiver will be granted if and only if the design control authority (LILE) can establish the qualifications of the offerer through the evaluation of written inputs from the offerer or from previous knowledge of the offerer's capabilities or from previous experience with the offerer on similar item acquisitions. If there is any doubt about the offerer's capability, the offerer will be required to submit a pre-qualification article. There is no guarantee of qualification by similarity. LILE reserves the right to require a pre-qualification article of all offerers.

2. The current acquisition need not and will not be delayed in order to provide an offerer with an opportunity to meet the requirements for qualification waiver.

3. Maximum time for approval of qualification by similarity will not exceed 15 days.

REVISION: *11*

ENGINEERING DATA LIST

* HISTORY *

DATE : 06MAY03	DATA TECH : SSF	ORGN SYMBOL : LGMPM	PR NR :	APPLICATION: T-38	PAGE 1 OF 1

CAGE: 98747	MANUFACTURER NAME: OGDEN AIR LOGISTICS CENTER OGDEN	REFERENCE NR: 7227218-10	NOUN : CYLINDER AND PISTON	NSN : 1620002640745LE

CAGE	DRAWING NUMBER	REV	NR SHEETS	NR CARDS	FURN CODE	DIST CODE	NOUN	REQUIREMENTS
98747	00-ALC/LGMPM /	B	0001	0000	S		ENGR DATA RQMTS (ATTACH A)	
76823	3-40512 /	G	0001	0000	S		BUSHING, SLEEVE-FLANGED	
	/91C442							ECO
76823	3-40516 /	H	0001	0000	S		BUSHING, FLANGED	
76823	3-40521 /	E	0001	0000	S		BUSHING	
76823	3-40528 /	L	0001	0000	S		MARKINGS	
76823	6-41602 /	K	0002	0000	S		CYLINDER	
	/2-C-346							ADCN
	/92C1015							ECO
76823	6-41668 /	B	0001	0000	S		BUSHINGS, SLEEVE	
	/83C308							ECO
	/92C947							ECO
76823	6-41685 /	C	0001	0000	S		BUSHING, FLANGED	
98747	7227218 /	A	0001	0000	S		CYLINDER ASSY	
76823	9756-17 /	AF	0001	0000	S		BUSHING, TORQUE	

STANDARD ENGINEERING TEXT

ALL GOVERNMENT/MILITARY SPECIFICATIONS AND STANDARDS WILL NOT BE FURNISHED.
TO OBTAIN THESE SPECS AND STDS WRITE TO:
DODSSP
BUILDING 4/SECTION D
700 ROBINS AVE.
PHILADELPHIA PA. 19111-5098
TELEPHONE: (215) 697-2179
FAX: (215) 697-1462 TO VIEW OR ORDER: HTTP://WWW.DODSSP.DAPS.MIL

ENGINEERING DATA LIST REMARKS

FURNISHED METHOD CODE LEGEND:

C - CLASSIFIED DOCUMENT.
S - FURNISHED WITH SOLICITATION.
M - STABLE BASE DRAWING REQUIRED;
X - DATA SUPPLIED (NOT IN EDCARS).
R - FURNISHED BY PCD UPON REQUEST.
P - PARTIAL DOCUMENT FURNISHED.
V - VENDOR DRAWING;
G - GOV'T DOCUMENT.
O - OTHERS, CONTRACTOR MUST ACQUIRE.
A - DATA NOT

REV:	ENGINEERING DATA REQUIREMENTS *(ATTACHMENT "A")*

NOTE: MILITARY SPECIFICATIONS I/STANDARDS WILL NOT BE FURNISHED IN THE BID SET.

1. THE FOLLOWING INSTRUCTIONS ARE FURNISHED FOR THE MANUFACTURE OF

CYLINDER ASSY, NLG

2. PART NUMBER	3. NATIONAL STOCK NUMBER
7227218-10	**1620-00-264-0745 LE**

4. THE FOLLOWING SPECIFICATIONS/STANDARDS, ETC., WILL BE USED IN LIEU OF THE DATA INDICATED. THE SUPERSEDED DATA WILL NOT BE FURNISHED UNLESS SO INDICATED.

5. Identify Per MIL-STD-130 in lieu of IM-8 and MA-19.1.

6. Threading Per SAE AS-8879 in lieu of FH-32.

7. Install Bushings per the following in lieu of CP-4 and FH-19.

A. The bushing installations shall be accomplished in such a manner as to avoid damage to the finish on the I.D. of the Housing into which the Bushing is installed, or the Finish of the Bushing. Forced installation of Sub-Zero installations, such as the use of a Press or Hammer in not permitted, and IS NOT acceptable. A small Non-Metallic Hammer may be used to tap the Bushing into alignment with the Housing Bore, or to seat the Bushing.

B. Prior to Bushing Installation, the Parts and Housing Bore shall be cleaned with a cleaning solvent to remove all contamination.

C. Liquid Nitrogen shall be used for all Sub-Zero installations unless some other Sub-Zero Coolant is specified, and approved by OO-ALC/LGHLEN Engineering. The soak time of the Bushing in the Liquid Nitrogen shall be sufficient to allow the Bushing to reach the same temperature as the Coolant.

D. The Bushing shall be installed into the Housing immediately upon removal from the Coolant with an absolute minimum of lost time. Trial runs shall be accomplished as necessary to minimize installation time which should be in the order of about seven (7) seconds maximum.

E. It may occasionally be necessary to heat the Housing into which the Bushing is to be installed, in addition to Sub-Zero Cooling of the Bushing. Detail parts in process, which do not have Paint or Sealant or other Organic Material applied prior to heating, the parts shall be Heated by the use of Radiant Heat Techniques, such as Thermal Blankets, Infrared Lamps, ETC.: to the maximum temperature of 250 F. The temperature measuring devices shall be used to monitor heat and shall be located on areas of the part expected to reach maximum temperature. No Scaling, Oxidation, or Corrosion shall be permitted.

F. Bushings without Flanges shall be installed into Housing Bore which has received a Light Coat of Sealant per MIL-PRF-81733. Install Shrunken Bushing and wipe off any Excess Sealant that may have Extruded around the Periphery of both ends of the Bushing.

G. Bushings with Flanges shall be installed in a similar manner as paragraph (F) except sealant shall also be applied to Face or Lug under Flange. Sealant shall be applied in such a manner as to ensure complete coverage of inside face of Bushing Flange when Bushing is installed. Wipe off any excess Sealant around Periphery of Bushing Flange forming a Bead . Wipe any excess Sealant from other end of Bushing also.

H. For Bushings with External Grease Grooves, the inside of the Lug will be coated with MIL-C-16173 prior Bushing installation and Face of Lug will be coated with MIL-PRF-81733 per paragraph G, If Bushing is Flanged.

PREPARED BY	SYMBOL	DATE
SANDI L. FIELD	**LGMPM**	20020508

8. Shot Peen per SAE AMS-S-13165 in Lieu of MP-207.

9. Ultrasonic Inspection per SAE AMS-STD-2154 Type 1 class A, in lieu of IT-32.5.

10. Sulfuric Anodize per SAE AMS-A-8625 Type II, Class 1 in lieu of FP-59 and NFS-76.

11. For Drawing 6-41602:

A. In lieu of Finish SPEC NFS-76, Finish per the following:

1. Apply ONE coat epoxy Waterborne primer per MIL-PRF-85582, Type 1, Class 2. Alternate Primer, ONE coat EPOXY-PLOYAMIDE per MIL-PRF-23377, Type 1.

2. Apply TWO TOPCOATS of POLYURETHANE per MIL-PRF-85285, Type I COLOR # 17925 (WHITE) per FED-STD-595.

B. In lieu of TT-L-32 and FP-81, use A-A-3165, COLOR # 17038 (BLACK) per FED-STD-595.

12. Perform Magnetic Particle Inspection per ASTM E 1444, in lieu of IT-32.3. Use Type Full Wave Direct Current (FWDC), Wet Continuous Method, fluorescent type with the following acceptance/rejection criteria: NO DEFECTS ALLOWED. The intent of NO DEFECTS ALLOWED is that the inspection is conducted at the required sensitivity level and there shall be no indications allowed. The Inspector performing the Inspection will be certified to the Level II with the Inspection Procedure developed by a Level III as specified in NAS-410.

13. Perform Fluorescent penetrant inspection per ASTM E 1417, Type I, Method B or C, Level 3 or 4 in lieu of IT-32.1 with the following Acceptance/Rejection Criteria: NO DEFECTS ALLOWED. The intent of NO DEFECTS ALLOWED is that the inspection is conducted at the required Sensitivity Level and there shall be no indications allowed. The inspector performing the inspection shall be certified to Level II with the inspection procedure developed by a Level III as specified in NAS-410.

14. Application of Sealing, Locking, and Retaining Compounds Use MIL-R-46082, Type II in lieu of MA-103.

15. Heat Treat per SAE AMS-H-6875 in lieu of HT-3.

16. Heat Treat for Beryllium Copper per SAE AMS-H-7199 in Lieu of HT-9.2.

17. Heat Treat per SAE AMS-H-6088, T73 Cond in lieu of HT-1.

18. Cadmium Plate per SAE AMS-QQ-P-416. Type II, Class 2 in lieu of FP-2.

19. Drawing 3-40516, P110-1 is not required.

20. MATERIAL:

A. Material Call Out on DWG 3-40521 use ASTM B150 in lieu of QQ-C-390.

B. Material Call Out on DWG 6-41685 use ASTM B150 in lieu of QQ-B-671.

C. Material Call Out on DWG 3-40516 use SAE AMS 6382 in lieu of MIL-S-5626.

21. Finishes per NFS-70 and NFS-76 are not required on the following items.

A. 3-40516-7
B. 9756-17
C. 6-41668-3
D. 3-40521-3
E. 6-41685-3
F. 3-40512-13

22. The Forging Shall be procured from the Original Forging Source, using the Original Certified Forging Procedures and Dies/Tooling.

A. Prior to Contract Award, The Detailed Part Bidder shall provide Certification from the Forging Source, to the Government that the Certified Dies and Procedures are available and the Forging Source has an agreement with the Detail Parts Bidder to provide Forgings for their use in the event they are the successful Bidder.

B. Prior to Production, Forging Lot Qualification shall be accomplished as specified on the Forging Drawing and SAE AMS-F-7190 for Steel Forgings and SAE AMS-A-22771 for Aluminum Forgings. The Detailed Part Contractor Shall assure that this has been accomplished by the Forging Source and shall submit certified documentation of accomplishment to the Government.

23. Forging Source, Control and Location of Dies:

A. Forging Drawings:
B. Die Number:
C. Control Of Forging Process:
D. Location of Forging Dies:

REV:	ENGINEERING DATA REQUIREMENTS CONTINUATION SHEET *(ATTACHMENT "A")*
PART NUMBER 7227218-10 '	NATIONAL STOCK NUMBER 1620-00-264-0745 LE

24. OO-ALC/LGHLEN System Engineer retains all rights to review and accept Material Review Boards (MRB's) prior to shipment of Discrepant Items. All Deviations, Minor and Major, from the Engineering Drawing Package will be submitted for MRB Disposition.

25. Prior to Contract Award, the Contractor will Certify to the Government in writing full compliance with Manuals, Specifications, and Standards called out and required for the Manufacture of this Contracted Landing Gear Component/Assembly. Contractor is responsible to completely search these Manuals, Specifications, and Standards and fully understand the requirements necessary to manufacture Landing Gear Components. Any questions can be forwarded to OO-ALC/LGHLEN.

26. Serial Number shall be Vibropeened, or Steel Stamped, in 0.09" LETTERS 0.004" - 0.007" Deep in the location indicated. If the Drawing does not indicate a Location, OO-ALC/LGHLEN shall provide S/N Location Instructions. Serialization of item shall be accomplished as follows:

The Serialization shall begin with the CAGE (FSCM)of the Contractor named on the Contract, followed by a Dash and the 2 Digit year of Manufacture, followed by a dash and a sequentially unique 3 digit number. A Contractor who receives numerous intermittent contracts shall start Serialization of item with the next number in Sequence of the prior Contract. If a Contract produces more then 999 items, the Serial Number should begin using 4 Digit Serial Numbers. The Serial Number should appear like this: "S/N 98747-03-001".

PREPARED BY	SYMBOL	DATE
SANDI L. FIELD	LGMPM	20030508

SOURCE QUALIFICATION REQUIREMENTS
(PL98-525, SECTION 2319)

STOCK NR (NSN)1620-00-264-0745LE
NOUN: Cylinder Assy - NLG

PART NUMBER (P/N)7227218-10
AIRCRAFT:T-38 & F-5 (A/B)

SECTION C

QUALIFICATION REQUIREMENTS THAT MUST BE SATISFIED TO BECOME A QUALIFIED SOURCE:

1. Because of the need for uninterrupted item support to military aircraft systems while keeping with the requirements of PL 98-525, the current acquisition need not and generally will not be delayed to provide an offeror an opportunity to qualify. Normal acquisition practices at OO-ALC should preclude the denial of opportunity to any interested offeror.

2. The offeror must provide a pre-contract award qualification article, which meets the requirements of the engineering drawings, material specifications, and process specifications. However, successful completion of the qualification testing does not guarantee any contract award. If the offeror is deemed qualified and awarded the contract, a post-contract award first ariticle exhibit may be required to verify production capability.

3. The qualification article will be subjected to form, fit, and function verification as well as required testing to assure compliance with data list and other applicable procurement criteria. The qualification article shall demonstrate full compatibility and comparability with existing parts.

4. The required materials will be procured from a qualified source and shall meet the requirements of their respective specifications. The offeror will assure that the supplier has accomplished this and shall submit certified documentation of accomplishment of the above requirements to the purchaser along with the pre-contract award qualification article.

5. The required forgings shall be procured from the qualified forging source using the original certified forging procedures and dies. Forging material and lot qualifications shall be accomplished as required in the specified forging drawing, P/N 7227218-10 and specification MIL-A-22771. The offeror shall assure that this is or has been accomplished by the forging source and will submit certified documentation of accomplishment of the above requirements to the government along with the pre-contract award qualification article.

6. The qualification article once submitted will become subject to such testing as deemed necessary by the U.S. Government to prove that the article meets all dimensional, processing and functional requirements. Such testing may result in the destruction of the article. Following completion of necessary testing and evaluation, the article no matter what its condition shall be returned to the contractor or disposed of at his discretion and direction whether it was found acceptable or not.

7. Form verification: The U.S. Government's Quality Verification Center (QVC) will be used to insure compliance with the dimensional requirements of the article. Material and processing compliance will also be verified as required.

8. Fit/function verification: Existing components and government test stands and fixtures will be utilized to verify physical interface and functional performance of articles.

9. Testing for material and process compliance.
   (a) Material analysis
   (b) Heat treat
   (c) Grinding
   (d) Plating
   (e) Finish
   (f) Grain flow
   (g) Other

SOURCE QUALIFICATION REQUIREMENTS
(PL98-525, SECTION 2319)

STOCK NR (NSN)1620-00-264-0745LE PART NUMBER (P/N)7227218-10
NOUN: Cylinder Assy - NLG AIRCRAFT:T-38 & F-5 (A/B)

10. Remarks:

a. Organic verification capabilities exist at OO-ALC.

b. Testing requirements outside organic capabilities will be contracted out.

11. The estimated cost of government testing and evaluation is $1500.

12. Maximum time for testing of the qualification article will not exceed 30 days from receipt at testing agency.

SECTION D

QUALIFICATION WAIVER REQUIREMENTS.

1. An offerer who has had previous experience in the manufacture and qualification of items, which can be correlated with this product, may apply to the design control authority at OO-ALC for a waiver of the above stated qualification requirements.

a. The qualification waiver criteria utilized by the design control authority to perform a qualification analysis are available upon request. The qualification waiver criteria may be used as a guide in preparing the offerer's written input to the design control authority.

b. The burden of proof for written inputs is on the offerer. The design control authority will not pursue authenticity verification of claims made by the offerer of product manufacturing experience with other Government or non-Government agencies. Unsubstantiated claims will not be considered in the waiver analysis process.

c. This waiver will be granted if and only if the design control authority (LILE) can establish the qualifications of the offerer through the evaluation of written inputs from the offerer or from previous knowledge of the offerer's capabilities or from previous experience with the offerer on similar item acquisitions. If there is any doubt about the offerer's capability, the offerer will be required to submit a pre-qualification article. There is no guarantee of qualification by similarity. LILE reserves the right to require a pre-qualification article of all offerers.

2. The current acquisition need not and will not be delayed in order to provide an offerer with an opportunity to meet the requirements for qualification waiver.

3. Maximum time for approval of qualification by similarity will not exceed 15 days.

REVISION: *01*

ENGINEERING DATA LIST

* HISTORY *

DATE : 06FEB03	DATA TECH : SSF	ORGN SYMBOL : LGMPM	PR NR :	APPLICATION: T-38	PAGE 1 OF 1

CAGE: 76823	MANUFACTURER NAME: NORTHROP GRUMMAN CORP EL SEGUNDO CA	REFERENCE NR: 3-41606-3	NOUN : PISTON,LANDING GEAR	NSN : 1620009490417LE

CAGE	DRAWING NUMBER	REV	NR SHEETS	NR CARDS	FURN CODE	DIST CODE	NOUN	REQUIREMENTS
98747	00-ALC 462/LGMPM /		0000	0000	S		ATCH "A"	
76823	3-40513 /	E	0000	0000	S		BUSHING - FLANGED	
76823	3-40526 /	D	0000	0000	S		PIN - PISTON HEAD LOCK	
76823	3-40528 /	L	0000	0000	S		MARKING - LADING GEAR	
76823	3-41603 /	D	0000	0000	S		COLLAR, LOWER TORQUE, NLG	
76823	3-41605 /	E	0000	0000	S		PISTON ASSY - NLG	
76823	3-41606 /	C	0000	0000	S		PISTON, NOSE LANDING GEAR	
	/84C451							ECO
76823	3-41631 /	A	0000	0000	S		BUSHING, TOWING DISCONNECT - NLG	
76823	6-41621 /	C	0000	0000	S		RETAINER, LOWER TORQUE COLLAR	
76823	9756-3 /	AD	0000	0000	S		HEAD - PISTON, NLG	
76823	9756C-29 /	AE	0000	0000	S		WASHER, NLG	

STANDARD ENGINEERING TEXT

ALL GOVERNMENT/MILITARY SPECIFICATIONS AND STANDARDS WILL NOT BE FURNISHED.
TO OBTAIN THESE SPECS AND STDS WRITE TO:
DODSSP
BUILDING 4/SECTION D
700 ROBINS AVE.
PHILADELPHIA PA. 19111-5098
TELEPHONE: (215) 697-2179
FAX: (215) 697-1462 TO VIEW OR ORDER: HTTP://WWW.DODSSP.DAPS.MIL

ENGINEERING DATA LIST REMARKS

FURNISHED METHOD CODE LEGEND:

C - CLASSIFIED DOCUMENT.
S - FURNISHED WITH SOLICITATION.
M - STABLE BASE DRAWING REQUIRED; FURNISHED WITH CONTRACT AWARD
X - DATA SUPPLIED (NOT IN EDCARS).
R - FURNISHED BY PCD UPON REQUEST.
P - PARTIAL DOCUMENT FURNISHED.
V - VENDOR DRAWING; (NOT PROVIDED)
G - GOV'T DOCUMENT.
O - OTHERS, CONTRACTOR MUST ACQUIRE.
A - DATA NOT

REV:	ENGINEERING DATA REQUIREMENTS *(ATTACHMENT "A")*

NOTE: MILITARY SPECIFICATIONS I/STANDARDS WILL NOT BE FURNISHED IN THE BID SET.

1. THE FOLLOWING INSTRUCTIONS ARE FURNISHED FOR THE MANUFACTURE OF

PISTON, NLG ASSY OF

2. PART NUMBER	3. NATIONAL STOCK NUMBER
3-41606-3	**1620-00-949-0417 LE**

4. THE FOLLOWING SPECIFICATIONS/STANDARDS, ETC., WILL BE USED IN LIEU OF THE DATA INDICATED. THE SUPERSEDED DATA WILL NOT BE FURNISHED UNLESS SO INDICATED.

5. Markings and Identification per MIL-STD-130 in lieu of IM-8 and MA-19.9.

6. Safety Procedures Per NASM20995 and NASM33540 in Lieu of FH-12.

7. Install Bolts, Screw, Washers, Pins, Etc. per best shop procedure in Lieu of FH-11 and FH-12.

8. Aircraft lubricant per MIL-HDBK-838 in Lieu of L-3.

9. Surface Roughness per ANSI B46.1 in Lieu of MIL-STD-10.

10. Cadmium Plate per SAE-AMS-QQ-P-416A Type II, Class 3 in Lieu of FP-2.

11. Heat Treat per SAE AMS-H6875 in Lieu of HT-3.2.

12. Solid Film Lubricant per MIL-L-46010 Type 1 or MIL-L-23398 in Lieu of MAI1115 and L-6.

13. Threads per MIL-S8879, Safety Critical, in Lieu of FH-32.

14. Perform Magnetic Particle inspection per ASTM E 1444 in Lieu of MIL-I-6868. Use full wave direct current (FWDC). Wet continuous method, Fluorescent Type with the following acceptance/rejection Criteria: NO DEFECTS ALLOWED. The intent of NO DEFECTS ALLOWED. is that the inspection is conducted at the required sensitivity level and there shall be no indications allowed. The inspector performing the inspection shall be certified to Level II with the inspection procedure developed by a level III as specified in NAS-410.

15. Perform Fluorescent penetrant inspection per ASTM E 1417, Type I, Method B or C, Level 3 or 4 in lieu of MIL-I-6866 with the following Acceptance/Rejection Criteria: NO DEFECTS ALLOWED. The intent of NO DEFECTS ALLOWED is that the inspection is conducted at the required Sensitivity Level and there shall be no indications allowed. The inspector performing the inspection shall be certified to Level II with the inspection procedure developed by a Level III as specified in NAS-410.

16. Chrome Plate Per MIL-STD-1907. Type 1 Class 2 in Lieu of FP-6.1.

17. Shot Peen per SAE AMS-S-13165 in Lieu of MA-57.

18. After contract award, the successful bidder shall provide a copy of the processing documentation (Routing Documents and Process Specifications) To LGHLEN for Final Review before production begins.

19. OO-ALC/LGHLEN System Engineering retains all right to review and accept Material Review Board (MRB's) Dispositions prior to shipment of Discrepant item. All Deviations, Minor and Major, From the Engineering Drawing Package shall be submitted for MRB Disposition.

PREPARED BY	SYMBOL	DATE
SANDI L. FIELD	LGMPM	20030210

REV:	ENGINEERING DATA REQUIREMENTS CONTINUATION SHEET *(ATTACHMENT "A")*

PART NUMBER	NATIONAL STOCK NUMBER
3-41606-3	1620-00-949-0417 LE

20. Prior to contract award, the Contractor shall certify to the Government in writing full compliance with Manuals, Specifications and Standards called out and required for the Manufacture of this contracted landing Gear Component/Assembly. Contractor is responsible to completely search these Manuals, Specifications and Standards and fully understand the requirements necessary to manufacture Landing Gear Components. Any Questions can be forwarded to OO-ALC/LGHLE.

21. Apply a Thin Uniform Coating of Primer per MIL-PRF-23377 or MIL-PRF-85582 (After CADMIUM PLATING) to all Bushing Bores and allow to fully cure prior to installation of Bushing (Primer Shall Not Obstruct Grease Passages).

22. Per Flag Note 8, Drawing 2007302, install bushings per the following in Lieu of MM5743:

A. The Bushing Installations shall e accomplished in such a manner as to avoid damage to the finish on the I.D. of the Housing into which the bushing is installed, or the finish of the bushing. Forced installation of Sub-Zero installations, such as the use of a press or hammer is not permitted, and is not acceptable. A small non-metallic Hammer may be used to tap the bushing into alignment with the housing bore, or to seat the bushing.

B. Prior to Bushing installation, the parts and housing bore shall be cleaned with a cleaning solvent to remove all contamination.

C. Liquid Nitrogen shall be used for all Sub-Zero installations unless some other Sub-Zero coolant is specified and approved by OO-ALC/LGHLEN Engeering. The soak time of the bushing in the Liquid Nitrogen shall be Sufficient to allow the bushing to reach the same temperature as the coolant.

D. The Bushing shall be installed into the housing immediately upon removal from the coolant with an absolute minimum of lost time. Trail runs shall be accomplished as necessary to minimize installation time which should be in order of about seven (7) seconds maximum.

E. It may occasionally be necessary to heat the housing into which the bushing is to be installed, in addition to sub-zero cooling of the bushing. Detail parts in process will not have Paint, Sealant or other Organic Material Applied prior to Heating. The parts shall be heated by the use of Radiant Heat Techniques, such as Thermal Blankets, Infrared Lamps ETC.; To the maximum temperature of 250F. Temperature measuring devices shall be used to monitor heat and shall be located on areas of the part expected to reach maximum temperature. No scaling, oxidation or corrosion shall be permitted.

F. Bushings without Flanges shall be installed into Housing Bore which has received a light coat of Sealant per MIL-PRF-81733. Install shrunken bushing and wipe off any excess sealant that may have extruded around the periphery of Both Ends of the Bushing.

G. Bushings with Flanges shall be installed in a similar Manner as paragrahp (F) except Sealant shall also be applied to Face of Lug under Flange. Sealant shall be applied in such a manner as to ensure complete coverage of inside faace of bushing flange when bushing is installed. Wipe off any excess sealant around periphery of bushing flange. Wipe off any excess sealant from other end of bushing also.

H. For Bushings with external Grease Grooves, the inside of the Lug will be coated with MIL-C-16173 prior to bushing installation and face of Lug will be coated with MIL=PRF-81733 per paragraph G, if bushing is flanged.

PREPARED BY	SYMBOL	DATE
SANDI L. FIELD	LGMPM	20030210

REV:	ENGINEERING DATA REQUIREMENTS CONTINUATION SHEET *(ATTACHMENT "A")*

PART NUMBER	NATIONAL STOCK NUMBER
3-41606-3	1620-00-949-0417 LE

23. For Parts Heat-Treated to 180 KSI and above, any Surface Ground/Machined after Heat Treat shall be inspected for abusive grinding/machining Burns per MIL-STD-867. Grinding shall be per MIL-STD-866.

24. The Forging Shall be procured from the Original Forging Source, using the Original Certified Forging Procedures and Dies/Tooling.

A. Prior to Contract Award, The Detailed Part Bidder shall provide Certification from the Forging Source, to the Government that the Certified Dies and Procedures are available and the Forging Source has an agreement with the Detail Parts Bidder to provideForgings for their use in the event they are the successful Bidder.

B. Prior to Production, Forging Lot Qualification shall be accomplished as specified on the Forging Drawing and SAE AMS-F-7190 for Steel Forgings and Sae AMS-A-22771 for Aluminum Forgings. The Detailed Part Contractor Shall assure that theis has been accomplished by the forging source and shall submit certified documentation of accomplishment to the Government.

25. Forging Source, Control and Location of Dies:

Forging Drawings: 3-41606-1F ABD 3-41605-11F.

Die# : Unknown and 7874

Control Of Forging Process: Northrop

Location of Forging Dies:

KROPP FORGE COMPANY
5301 W. Roosebelt Road
CICERO, IL 60650-1273
PHONE: (708) 652-6691
CAGE: OBFN1

26. PRIOR TO CONTRACT AWARD, THE CONTRACTOR SHALL ADVISE THE GOVERNMENT IN WRITING OF THE INTENT TO PROCURE NEW FORGING DIES AND THE PROPOSED FORGING SOURCE: THE CONTRACTOR SHALL NOT PROCEED TO OBTAIN NEW FORGING DIES WITHOUT THE EXPRESS WRITTEN CONSENT OF THE GOVERNMENT PROCURING ACTIVITY. THE GOVERNMENT SHALL HAVE UNLIMITED USE OF THE DIES DEVELOPED UNDER THIS CONTRACT. THE CONTRACTOR SHALL INFORM THE FORGING HOUSE IN WRITING, AT THE SAME TIME THE ORDER FOR THE DIES IS PLACED, THAT THE GOVERNMENT HAS UNLIMITED USE RIGHTS OF THE DIES AND FORWARD A COPY OF THIS LETTER TO THE GOVERNMENT CONTRACTING OFFICER.

PREPARED BY	SYMBOL	DATE
SANDI L. FIELD	LGMPM	20030210

SOURCE QUALIFICATION REQUIREMENTS
(PL98-525, SECTION 2319)

STOCK NR (NSN)1620-00-949-0417LE
NOUN: Piston, NLG

PART NUMBER (P/N)3-41606-3
AIRCRAFT:T-38

SECTION C

QUALIFICATION REQUIREMENTS THAT MUST BE SATISFIED TO BECOME A QUALIFIED SOURCE:

1. Because of the need for uninterrupted item support to military aircraft systems while keeping with the requirements of PL 98-525, the current acquisition need not and generally will not be delayed to provide an offeror an opportunity to qualify. Normal acquisition practices at OO-ALC should preclude the denial of opportunity to any interested offeror.

2. The offeror must provide a pre-contract award qualification article, which meets the requirements of the engineering drawings, material specifications, and process specifications. However, successful completion of the qualification testing does not guarantee any contract award. If the offeror is deemed qualified and awarded the contract, a post-contract award first ariticle exhibit may be required to verify production capability.

3. The qualification article will be subjected to form, fit, and function verification as well as required testing to assure compliance with data list and other applicable procurement criteria. The qualification article shall demonstrate full compatibility and comparability with existing parts.

4. The required materials will be procured from a qualified source and shall meet the requirements of their respective specifications. The offeror will assure that the supplier has accomplished this and shall submit certified documentation of accomplishment of the above requirements to the purchaser along with the pre-contract award qualification article.

5. The required forgings shall be procured from the qualified forging source using the original certified forging procedures and dies. Forging material and lot qualifications shall be accomplished as required in the specified forging drawing, P/N 3-41606-3 and specification MIL-F-7190. The offeror shall assure that this is or has been accomplished by the forging source and will submit certified documentation of accomplishment of the above requirements to the government along with the pre-contract award qualification article.

6. The qualification article once submitted will become subject to such testing as deemed necessary by the U.S. Government to prove that the article meets all dimensional, processing and functional requirements. Such testing may result in the destruction of the article. Following completion of necessary testing and evaluation, the article no matter what its condition shall be returned to the contractor or disposed of at his discretion and direction whether it was found acceptable or not.

7. Form verification: The U.S. Government's Quality Verification Center (QVC) will be used to insure compliance with the dimensional requirements of the article. Material and processing compliance will also be verified as required.

8. Fit/function verification: Existing components and government test stands and fixtures will be utilized to verify physical interface and functional performance of articles.

9. Testing for material and process compliance.

(a) Material analysis
(b) Heat treat
(c) Grinding
(d) Plating
(e) Finish
(f) Grain flow
(g) Other

SOURCE QUALIFICATION REQUIREMENTS
(PL98-525, SECTION 2319)

STOCK NR (NSN)1620-00-949-0417LE
NOUN: Piston, NLG

PART NUMBER (P/N)3-41606-3
AIRCRAFT:T-38

10. Remarks:

a. Organic verification capabilities exist at OO-ALC.

b. Testing requirements outside organic capabilities will be contracted out.

11. The estimated cost of government testing and evaluation is $1500.

12. Maximum time for testing of the qualification article will not exceed 30 days from receipt at testing agency.

SECTION D

QUALIFICATION WAIVER REQUIREMENTS.

1. An offerer who has had previous experience in the manufacture and qualification of items, which can be correlated with this product, may apply to the design control authority at OO-ALC for a waiver of the above stated qualification requirements.

a. The qualification waiver criteria utilized by the design control authority to perform a qualification analysis are available upon request. The qualification waiver criteria may be used as a guide in preparing the offerer's written input to the design control authority.

b. The burden of proof for written inputs is on the offerer. The design control authority will not pursue authenticity verification of claims made by the offerer of product manufacturing experience with other Government or non-Government agencies. Unsubstantiated claims will not be considered in the waiver analysis process.

c. This waiver will be granted if and only if the design control authority LGHLEN can establish the qualifications of the offerer through the evaluation of written inputs from the offerer or from previous knowledge of the offerer's capabilities or from previous experience with the offerer on similar item acquisitions. If there is any doubt about the offerer's capability, the offerer will be required to submit a pre-qualification article. There is no guarantee of qualification by similarity. LGHLEN reserves the right to require a pre-qualification article of all offerers.

2. The current acquisition need not and will not be delayed in order to provide an offerer with an opportunity to meet the requirements for qualification waiver.

3. Maximum time for approval of qualification by similarity will not exceed 15 days.

REVISION: *03*

ENGINEERING DATA LIST

* HISTORY *

DATE : 13MAY03	DATA TECH : SSF	ORGN SYMBOL : LGMPM	PR NR :	APPLICATION: T-38	PAGE 1 OF 1

CAGE: 98747	MANUFACTURER NAME: OGDEN AIR LOGISTICS CENTER OGDEN	REFERENCE NR: 7227216-10	NOUN : CYLINDER AND PISTON	NSN : 1620002640750LE

CAGE	DRAWING NUMBER	REV	NR SHEETS	NR CARDS	FURN CODE	DIST CODE	NOUN	REQUIREMENTS
98747	OO-ALC/LGMPM /	A	0004	0000	X		ENGR. DATA RQMTS. ATTACHMENT"A"	
76823	6-40602 /	P	0000	0000	S		CYLINDER - MLG	
	/2-C-347							DCN
	/4-C-28							DCN
	/80C030							ECO
	/81C154							ECO
76823	6-40622 /	D	0000	0000	S		BUSHING	
	/90C076							ECO
76823	6-40632 /	B	0000	0000	S		BUSHING	
76823	6-40637 /	D	0000	0000	S		BUSHING	
	/82C293							ECO
76823	6-40638 /	D	0000	0000	S		BUSHING	
	/F04354							
76823	6-40691 /	C	0000	0000	S		BUSHING	
98747	7227216 /	A	0000	0000	S		CYLINDER ASSY-MLG	
76823	9757E-31 /	AD	0000	0000	S		BUSHING - AFT TRUNNION MLG	

STANDARD ENGINEERING TEXT

ALL GOVERNMENT/MILITARY SPECIFICATIONS AND STANDARDS WILL NOT BE FURNISHED.
TO OBTAIN THESE SPECS AND STDS WRITE TO:
DODSSP
BUILDING 4/SECTION D
700 ROBINS AVE.
PHILADELPHIA PA. 19111-5098
TELEPHONE: (215) 697-2179
FAX: (215) 697-1462 TO VIEW OR ORDER: HTTP://WWW.DODSSP.DAPS.MIL

ENGINEERING DATA LIST REMARKS

FURNISHED METHOD CODE LEGEND:

C - CLASSIFIED DOCUMENT.
S - FURNISHED WITH SOLICITATION.
M - STABLE BASE DRAWING REQUIRED; FURNISHED WITH CONTRACT AWARD.
X - DATA SUPPLIED (NOT IN EDCARS).
R - FURNISHED BY PCD UPON REQUEST.
P - PARTIAL DOCUMENT FURNISHED.
V - VENDOR DRAWING; (NOT PROVIDED)
G - GOV'T DOCUMENT.
O - OTHERS, CONTRACTOR MUST ACQUIRE.
A - DATA NOT

REV:	ENGINEERING DATA REQUIREMENTS *(ATTACHMENT "A")*

NOTE: MILITARY SPECIFICATIONS I/STANDARDS WILL NOT BE FURNISHED IN THE BID SET.

1. THE FOLLOWING INSTRUCTIONS ARE FURNISHED FOR THE MANUFACTURE OF

CYLINDER ASSY, NLG

2. PART NUMBER	3. NATIONAL STOCK NUMBER
7227216-10	**1620-00-264-0750 LE**

4. THE FOLLOWING SPECIFICATIONS/STANDARDS, ETC., WILL BE USED IN LIEU OF THE DATA INDICATED. THE SUPERSEDED DATA WILL NOT BE FURNISHED UNLESS SO INDICATED.

DRAWING 7227216-10 S/S's DRAWING 6-40602-7 (9) IN PART.

5. Identify Per MIL-STD-130 in lieu of IM-8 and MA-19.1.

6. Threading Per SAE AS-8879, Safeaty Critical, in lieu of FH-32.

7. Install Bushings with Locktite Process per the following in lieu of FH-19 and MA-103.

A. The Bushing Installations shall be accomplished in such a manner as to avoid damage to the finish on the I.D. of the Housing into which the Bushing is installed, or the Finish of the Bushing. Forced installation of Sub-Zero installations, such as the use of a Press or Hammer in not permitted, and IS NOT acceptable. A small Non-Metallic Hammer may be used to tap the Bushing into alignment with the Housing Bore, or to Seat the Bushing.

B. Prior to Bushing Installation, the Parts and Housing Bore shall be cleaned with a cleaning solvent to remove all contamination.

C. Liquid Nitrogen shall be used for all Sub-Zero installations unless some other Sub-Zero Coolant is specified, and approved by OO-ALC/LGHLEN Engineering. The soak time of the Bushing in the Liquid Nitrogen shall be sufficient to allow the Bushing to reach the same temperature as the Coolant.

D. The Bushing shall be installed into the Housing immediately upon removal from the Coolant with an absolute minimum of lost time. Trial runs shall be accomplished as necessary to minimize installation time which should be in the order of about seven (7) seconds maximum.

E. It may occasionally be necessary to heat the Housing into which the Bushing is to be installed, in addition to Sub-Zero Cooling of the Bushing. Detail parts in process, which do not have Paint or Sealant or other Organic Material applied prior to heating, the parts shall be Heated by the use of Radiant Heat Techniques, such as Thermal Blankets, Infrared Lamps, ETC.: to the maximum temperature of 250 F. The temperature measuring devices shall be used to monitor heat and shall be located on areas of the part expected to reach maximum temperature. No Scaling, Oxidation, or Corrosion shall be permitted.

F. Bushings without Flanges shall be installed into Housing Bore which has received a Light Coat of Sealant per MIL-PRF-81733. Install Shrunken Bushing and wipe off any Excess Sealant that may have Extruded around the Periphery of both ends of the Bushing.

G. Bushings with Flanges shall be installed in a similar manner as paragraph (F) except sealant shall also be applied to Face or Lug under Flange. Sealant shall be applied in such a manner as to ensure complete coverage of inside face of Bushing Flange when Bushing is installed. Wipe off any excess Sealant around Periphery of Bushing Flange forming a Bead . Wipe any excess Sealant from other end of Bushing also.

H. For Bushings with External Grease Grooves, the inside of the Lug will be coated with MIL-C-16173 prior Bushing installation and Face of Lug will be coated with MIL-PRF-81733 per paragraph G, If Bushing is Flanged.

PREPARED BY	SYMBOL	DATE
SANDI L. FIELD	**LGMPM**	20020613

REV:	ENGINEERING DATA REQUIREMENTS CONTINUATION SHEET *(ATTACHMENT "A")*

PART NUMBER	NATIONAL STOCK NUMBER
7227216-10	1620-00-264-0750 LE

8. Shot Peen per SAE AMS-S-13165 in Lieu of MP-207.

9. Ultrasonic Inspection per SAE AMS-STD-2154 Type 1 class A, in lieu of IT-32.5.

10. Sulfuric Anodize per SAE AMS-A-8625 Type II, Class 1 in lieu of FP-3.

11. Perform Magnetic Particle Inspection per ASTM E 1444, in lieu of IT-32.3. Use Type Full Wave Direct Current (FWDC), Wet Continuous Method, fluorescent type with the following acceptance/rejection criteria: NO DEFECTS ALLOWED. The intent of NO DEFECTS ALLOWED is that the inspection is conducted at the required sensitivity level and there shall be no indications allowed. The Inspector performing the Inspection will be certified to the Level II with the Inspection Procedure developed by a Level III as specified in NAS-410.

12. Perform Fluorescent penetrant inspection per ASTM E 1417, Type I, Method B or C, Level 3 or 4 in lieu of IT-32.1 with the following Acceptance/Rejection Criteria: NO DEFECTS ALLOWED. The intent of NO DEFECTS ALLOWED is that the inspection is conducted at the required Sensitivity Level and there shall be no indications allowed. The inspector performing the inspection shall be certified to Level II with the inspection procedure developed by a Level III as specified in NAS-410.

13. Application of Sealing, Locking, and Retaining Compounds Use MIL-R-46082(IN4D), Type II in lieu of MA-103.

14. Heat Treat per SAE AMS-H-6875 in lieu of HT-3.4.

15. Heat Treat for Beryllium Copper per SAE AMS-H-7199 in Lieu of HT-9.2.

16. Heat Treat per SAE AMS-H-6088, in lieu of HT-1.

17. Cadmium Plate per SAE AMS-QQ-P-416. Type II, Class 2 in lieu of FP-2.

18. MATERIAL SPECIFICATION QQ-A-268 has been S/S by SAE AMS-QQ-A-225/6A

    A. Apply Finish Paint System per the following:
        1. One coat epoxy primer per MIL-PRE-23377.
        2. Two coats topcoat per MIL-PRF-85285, colow: White #17925 per Fed-Std-595.

    B. The following paint system may be applied as an alternate coating for environmental reasons.
        1. One Coat Epoxy Primer, waterborne per MIL-PRF-85582, Type I, Class 2.
        2. Two Coats Topcoat per MIL-PRF-85285, Type I, Color: White #17925 per FED-STD-595.

`19. Surface roughness per ASME B46.1, in lieu of ANSI B46.1

PREPARED BY	SYMBOL	DATE
SANDI L. FIELD	LGMPM	20030613

20. The Forging Shall be procured from the Original Forging Source, using the Original Certified Forging Procedures and Dies/Tooling.

A. Prior to Contract Award, The Detailed Part Bidder shall provide Certification from the Forging Source, to the Government that the Certified Dies and Procedures are available and the Forging Source has an agreement with the Detail Parts Bidder to provide Forgings for their use in the event they are the successful Bidder.

B. Prior to Production, Forging Lot Qualification shall be accomplished as specified on the Forging Drawing and SAE AMS-A-22771 for Aluminum Forgings. The Detailed Part Contractor Shall assure that this has been accomplished by the Forging Source and shall submit certified documentation of accomplishment to the Government.

21. Forging Source, Control and Location of Dies:

A. Forging Drawings: 6-40602-11F

B. Die Number: Unknown

C. Control Of Forging Process: Northrop

D. Location of Forging Dies: Unknown

22. **INSTRUCTIONS FOR QUALIFICATION OF NEW FORGING SOURCE;**

Prior to Contract Award, the Contractor **WILL** advise the Government in writing of their intent to procure new Forging Dies and the Proposed Forging Source. The contractor **SHALL NOT** proceed to obtain new Dies without the Express Consent of the Government Procuring Agency. The Contractor **WILL** request written instructions from OO-ALC/LGHLEN and the System Engineer for the Forging Die Qualification Requirements. The Government **WILL** have unlimited use of the Dies

REV:	ENGINEERING DATA REQUIREMENTS CONTINUATION SHEET *(ATTACHMENT "A")*

PART NUMBER	NATIONAL STOCK NUMBER
7227216-10	**1620-00-264-0750 LE**

22. OO-ALC/LGHLEN System Engineer retains all rights to review and accept Material Review Boards (MRB's) prior to shipment of Discrepant Items. All Deviations, Minor and Major, from the Engineering Drawing Package will be submitted for MRB Disposition.

23. Prior to Contract Award, the Contractor will Certify to the Government in writing full compliance with Manuals, Specifications, and Standards called out and required for the Manufacture of this Contracted Landing Gear Component/Assembly. Contractor is responsible to completely search these Manuals, Specifications, and Standards and fully understand the requirements necessary to manufacture Landing Gear Components. Any questions can be forwarded to OO-ALC/LGHLEN.

24. Serial Number shall be Vibropeened, or Steel Stamped, in 0.09" LETTERS 0.004" - 0.007" Deep in the location indicated. If the Drawing does not indicate a Location, OO-ALC/LGHLEN shall provide S/N Location Instructions. Serialization of item shall be accomplished as follows:

The Serialization shall begin with the CAGE (FSCM)of the Contractor named on the Contract, followed by a Dash and the 2 Digit year of Manufacture, followed by a dash and a sequentially unique 3 digit number. A Contractor who receives numerous intermittent contracts shall start Serialization of item with the next number in Sequence of the prior Contract. If a Contract produces more then 999 items, the Serial Number should begin using 4 Digit Serial Numbers. The Serial Number should appear like this: "S/N 98747-03-001".

PREPARED BY	SYMBOL	DATE
SANDI L. FIELD	LGMPM	20030613

SOURCE QUALIFICATION REQUIREMENTS
(PL98-525, SECTION 2319)

STOCK NR (NSN)1620-00-264-0750LE
NOUN: Cylinder Assy - MLG

PART NUMBER (P/N)72272216-10
AIRCRAFT:T-38 & F-5 (A/B)

SECTION C

QUALIFICATION REQUIREMENTS THAT MUST BE SATISFIED TO BECOME A QUALIFIED SOURCE:

1. Because of the need for uninterrupted item support to military aircraft systems while keeping with the requirements of PL 98-525, the current acquisition need not and generally will not be delayed to provide an offeror an opportunity to qualify. Normal acquisition practices at OO-ALC should preclude the denial of opportunity to any interested offeror.

2. The offeror must provide a pre-contract award qualification article, which meets the requirements of the engineering drawings, material specifications, and process specifications. However, successful completion of the qualification testing does not guarantee any contract award. If the offeror is deemed qualified and awarded the contract, a post-contract award first ariticle exhibit may be required to verify production capability.

3. The qualification article will be subjected to form, fit, and function verification as well as required testing to assure compliance with data list and other applicable procurement criteria. The qualification article shall demonstrate full compatibility and comparability with existing parts.

4. The required materials will be procured from a qualified source and shall meet the requirements of their respective specifications. The offeror will assure that the supplier has accomplished this and shall submit certified documentation of accomplishment of the above requirements to the purchaser along with the pre-contract award qualification article.

5. The required forgings shall be procured from the qualified forging source using the original certified forging procedures and dies. Forging material and lot qualifications shall be accomplished as required in the specified forging drawing, P/N 72272216-10 and specification MIL-A-22771. The offeror shall assure that this is or has been accomplished by the forging source and will submit certified documentation of accomplishment of the above requirements to the government along with the pre-contract award qualification article.

6. The qualification article once submitted will become subject to such testing as deemed necessary by the U.S. Government to prove that the article meets all dimensional, processing and functional requirements. Such testing may result in the destruction of the article. Following completion of necessary testing and evaluation, the article no matter what its condition shall be returned to the contractor or disposed of at his discretion and direction whether it was found acceptable or not.

7. Form verification: The U.S. Government's Quality Verification Center (QVC) will be used to insure compliance with the dimensional requirements of the article. Material and processing compliance will also be verified as required.

8. Fit/function verification: Existing components and government test stands and fixtures will be utilized to verify physical interface and functional performance of articles.

9. Testing for material and process compliance.
   (a) Material analysis
   (b) Heat treat
   (c) Grinding
   (d) Plating
   (e) Finish
   (f) Grain flow
   (g) Other

SOURCE QUALIFICATION REQUIREMENTS
(PL98-525, SECTION 2319)

STOCK NR (NSN)1620-00-264-0750LE PART NUMBER (P/N)72272216-10
NOUN: Cylinder Assy - MLG AIRCRAFT:T-38 & F-5 (A/B)

10. Remarks:

a. Organic verification capabilities exist at OO-ALC.

b. Testing requirements outside organic capabilities will be contracted out.

11. The estimated cost of government testing and evaluation is $2000.

12. Maximum time for testing of the qualification article will not exceed 30 days from receipt at testing agency.

SECTION D

QUALIFICATION WAIVER REQUIREMENTS.

1. An offerer who has had previous experience in the manufacture and qualification of items, which can be correlated with this product, may apply to the design control authority at OO-ALC for a waiver of the above stated qualification requirements.

a. The qualification waiver criteria utilized by the design control authority to perform a qualification analysis are available upon request. The qualification waiver criteria may be used as a guide in preparing the offerer's written input to the design control authority.

b. The burden of proof for written inputs is on the offerer. The design control authority will not pursue authenticity verification of claims made by the offerer of product manufacturing experience with other Government or non-Government agencies. Unsubstantiated claims will not be considered in the waiver analysis process.

c. This waiver will be granted if and only if the design control authority (LILE) can establish the qualifications of the offerer through the evaluation of written inputs from the offerer or from previous knowledge of the offerer's capabilities or from previous experience with the offerer on similar item acquisitions. If there is any doubt about the offerer's capability, the offerer will be required to submit a pre-qualification article. There is no guarantee of qualification by similarity. LILE reserves the right to require a pre-qualification article of all offerers.

2. The current acquisition need not and will not be delayed in order to provide an offerer with an opportunity to meet the requirements for qualification waiver.

3. Maximum time for approval of qualification by similarity will not exceed 15 days.

REVISION: *02*

ENGINEERING DATA LIST

* HISTORY *

DATE : 19MAR03	DATA TECH : SOH	ORGN SYMBOL : LGMPM	PR NR :	APPLICATION: C-5 ACFT	PAGE 1 OF 1
CAGE: 17576	MANUFACTURER NAME: COLTEC IND INC	REFERENCE NR: 4G11414-107A	NOUN : PISTON	NSN : 1620004176249LE	

CAGE	DRAWING NUMBER	REV	NR SHEETS	NR CARDS	FURN CODE	DIST CODE	NOUN	REQUIREMENTS
98897	DS 30001 /		0000	0000	S		PROCESS SPEC.	
98897	LAC 0701 /		0000	0000	S		MACHINING SPEC.	
98897	LS 10795 /	A	0002	0000	S		LOCKHEED STD.	
98747	OO-ALC/LGMPM /		0004	0000	S		ENGRG. DATA REQTS. (ATCH "A")	
98897	4G11414 /	AB	0002	0000	S		PISTON.	
98897	77C350 /		0001	0000	S		ECO	
98897	4G11424 /	K	0001	0000	S		FORGING.	
98897	4G13490 /	P	0002	0000	S		BEARING.	
98897	4G13491 /	F	0001	0000	S		BEARING.	
98897	4G13774 /	B	0001	0000	S		FORGING.	
98897	95CS13 /		0001	0000	S		ECO	
98747	9825011 /		0001	0000	S		BOSS STD. DIM.	

STANDARD ENGINEERING TEXT

ENGINEERING DATA LIST REMARKS

FURNISHED METHOD CODE LEGEND:

C - CLASSIFIED DOCUMENT.
S - FURNISHED WITH SOLICITATION.
M - STABLE BASE DRAWING REQUIRED; FURNISHED WITH CONTRACT AWARD
X - DATA SUPPLIED (NOT IN EDCARS).
R - FURNISHED BY PCD UPON REQUEST.
P - PARTIAL DOCUMENT FURNISHED.
V - VENDOR DRAWING; (NOT PROVIDED)
G - GOV'T DOCUMENT.
O - OTHERS, CONTRACTOR MUST ACQUIRE.
A - DATA NOT

REV:	ENGINEERING DATA REQUIREMENTS *(ATTACHMENT "A")*

NOTE: MILITARY SPECIFICATIONS I/STANDARDS WILL NOT BE FURNISHED IN THE BID SET.

1. THE FOLLOWING INSTRUCTIONS ARE FURNISHED FOR THE MANUFACTURE OF

PISTON, STRUT ASSY, - MLG ASSY, OF

2. PART NUMBER	3. NATIONAL STOCK NUMBER
4G11414-107A	1620 00 417 6249 LE

4. THE FOLLOWING SPECIFICATIONS/STANDARDS, ETC., WILL BE USED IN LIEU OF THE DATA INDICATED. THE SUPERSEDED DATA WILL NOT BE FURNISHED UNLESS SO INDICATED.

a. Machine to meet drawing requirements per LAC 0701, in lieu of DS30003.

b. Identify to meet drawing requirements and MIL-STD-130 with the following notes, in lieu of STP 63-001. Serial number shall be vibropeened, steel stamped, or rubber stamped, where needed in 0.09" letters 0.004" - 0.007" deep in the location indicated. If the drawing does not indicate a location, OO-ALC/LILE will provide S/N location instructions. Serialization of item shall be accomplished as follows: The serialization will begin with the CAGE of the contractor named on the contract, followed by a dash and the two (2) digit year of manufacture, followed by a dash and a sequentially unique three (3) digit number. A contractor who receives numerous intermittent contracts will start serialization of item with the next number in sequence of the prior contract. If a contract produces more than 1000 items, the serial number should appear like this: "S/N 98747-03-001"

c. Heat treat per SAE AMS-H-6875, in lieu of STP 54-006.

d. Penetrant inspect per ASTM E1417, Type I, Method B or C, Level 3 or 4, in lieu of STP 53-201. With the following acceptance/rejection criteria: NO DEFECTS ALLOWED. The intent of NO DEFECTS ALLOWED is that the inspection is conducted at the required sensitivity level and there shall be no indications allowed. The inspector performing the inspection shall be level II certified, with the inspection procedure developed by a level III as specified in NAS-410.

e. Magnetic particle inspection per ASTM E1444, in lieu of MIL-I-6868. Use fluorescent type, full wave direct current (FWDC). and wet continuous method. With the following acceptance/rejection criteria: NO DEFECTS ALLOWED. The intent of NO DEFECTS ALLOWED is that the inspection is conducted at the required sensitivity level and there shall be no indications allowed. The inspector performing the inspection shall be level II certified, with the inspection procedure developed by a level III, as specified in NAS-410.

f. Any surface ground/machined after heat treat, shall be inspected for burns per MIL-STD-867, in lieu of STP 54-006. Grinding shall be per MIL-STD-866.

g. Shot peen to meet drawing requirements per SAE AMS-S-13165, in lieu of STP 51-501.

h. Assemble wet with TT-P-1757, in lieu of MIL-P-8585.

i. Cement using best aircraft industry standatds in lieu of STP 60-505. Use 3M Co. EC-2216 B/A adhesive. Install immediately after applying adhesive, in lieu of DS 30002. (Ref. Note 22 on drawing 4G13490)

g. Dimessioning and tolerincing per ASME Y14.5M.

PREPARED BY	SYMBOL	DATE
ORIN HATCH	LGMPM	8 May 03

REV:	ENGINEERING DATA REQUIREMENTS CONTINUATION SHEET *(ATTACHMENT "A")*

PART NUMBER	NATIONAL STOCK NUMBER
4G11414-107A	1620 00 417 6249 LE

5. Drilling, reaming, and honing to meet drawing specifications, using best shop procedures and the following notes in lieu of STP 51-410.

   a. High speed steel (HSS) drills shall be used to drill corrosion resistant steels.

   b. HSS reamers will be used for rough reaming, and final reaming of steels heat treated below 200 KSI. Carbide or premium grade hi-speed tipped reamers will be used for rough reaming of steels heat treated above 200 KSI.

   c. Drilling shall never be used as a final machining operation. A minimum of 0.015 inch on diameter shall be left for final reaming. Holes shall be finished by reaming or boring. When jigs, fixtures, or bushings are not used for drilling holes larger than 1/4 inch, the holes will be piloted with a center drill. Chemical, electrical, or electrochemical hole producing methods shall not be used as a final surface producing method without prior approval from OO-ALC/LGHLEN.

   d. Honing stones shall be of 150 to 500 alumium oxide grit with a medium-hard bond and preferably a multi-head stone. Heads with steel shoes or wipers shall not be used.

   e. Rough reaming, the reamer length shall be as short as consistent with required penetration. Final reaming, the diameter cut shall produce a hole that meets the requirements of the engineering drawing.

   f. Honing shall be used as a final operation where a surface finish better than 125 roughness height ratio is required, and cannot be produced by other means.

   g. Carbide drills can be operated at higher speeds that HSS drills, but must be used with caution. Thay must not be used in dull or chipped condition.

6. The following changes have been made in materials and specifications required.

   a. Use Air Force drawing 9825011 as required, in lieu of AND10050.

   b. Use SAE AMS 5515, in lieu of AMS 5515. (Ref. drawing 4G13490-111)

   c. Use SAE AMS 4535, in lieu of QQ-C-530, and AMS 4535, If tubing is used. (Ref. 4G13774, and ECO 95C513)

   d. Use SAE AMS 4881, in lieu of SAE 4881. (Ref. drawing 4G13491)

   e. Use SAE AMS 6257, in lieu of STM 05-501. (Ref. drawing (4G11424)

PREPARED BY	SYMBOL	DATE
ORIN HATCH	LGMPM	8 May 03

REV:	ENGINEERING DATA REQUIREMENTS CONTINUATION SHEET *(ATTACHMENT "A")*
PART NUMBER 4G11414-107A	NATIONAL STOCK NUMBER 1620 00 417 6249 LE

6. Finish per the following in lieu of DS 30000, and finish codes CC, C, D, M, and 17, 53, 54, 74-74.

   a. Cadmium plate per MIL-STD-1500, Type II, Class 2. (code CC) (Ref. drawing 4G11414)

   b. Cadmium plate per MIL-STD-870, Type II, Class 2or 3, to meet drawing requirements, in lieu of STP 58-020, and code C. (Ref. drawings 4G11414, 4G13490, and 4G13491)

   c. Chromium plate per MIL-STD-1501, Class 1, Type 1 or II, on I.D. (note 15) Class 2, Type II, on the O.D. (note 16) (code D) (Ref. drawing 4G11414)

   d. Passivate per SAE AMS QQ-P-35, Type optional. (code M) (Ref. drawing 4G13490)

   e. Primer wash is not required. (code 17)

   f. Corrosion inhibiting per MIL-PRF-46010. (code 53) (Ref. drawing 4G13490)

   g. One coat of epoxy primer per MIL-PRF-85582, Type I, Class 2. (code 54). Alternate, One coat of epoxy primer per MIL-PRF-23377, Type I.

   h. Two coats of top coat per MIL-PRF-85285, Type I. (color white, No. 17925 per FED-STD-595). (code 74-74)

7. Material Review Board disposition:

   a. OO-ALC/LLGHLEN system engineering retains all rights to review and accept MRB dispositions prior to shipment of discrepant item. All deviations, minor and major, from the engineering drawing package will be submitted for MRB disposition.

8. The required forgings will be procured from the qualified forging source using the original certified forging procedures and dies.

   a. Prior to contract award, the detail part bidder will provide certification, from the forging source to the government, that the certified dies and forging procedures are available and that the forging source has an agreement with the detail part bidder to provide forgings for his use in the event that he is the successful bidder.

   b. Prior to production, forging lot qualification will be accomplished as specified on the forging drawing, 4G52470 and SAE AMS-F-7190. (For steel forgings) The contractor will assure that this is or has been accomplished by the forging source and will submit certified documentation of accomplishment to the government.

PREPARED BY	SYMBOL	DATE
ORIN HATCH	LGMPM	8 May 03

REV:	ENGINEERING DATA REQUIREMENTS CONTINUATION SHEET *(ATTACHMENT "A")*

PART NUMBER	NATIONAL STOCK NUMBER
4G11414-107A	1620 00 417 6249 LE

9. FORGING SOURCE, CONTROL AND LOCATION OF DIES:

a. Forging drawing: Lockheed Mart. 4G11424-991A (CAGE 98897)

b. Control of forging process: B.F.Goodrich. (CAGE 13002)

c. Location of forging dies: Cameron Iron Works. (CAGE 10447)

d. Die number: 73797

e. Forging drawing: Lockheed Mart. 4G13774-991A (CAGE 98897)

f. Control of forging process: B.F.Goodrich. (CAGE 13002)

g. Location of forging dies: Brush Wellman Inc. (CAGE 055451)

h. Die number: 82141

10. The following specifications are not required for the manufacture of this item.

a. Static test X999, and DS 5025.

b. AGE CEI MRO151A, 4S51102, 4S51665, 4S51224, and CP40301.

PREPARED BY	SYMBOL	DATE
ORIN HATCH	LGMPM	8 May 03

SOURCE QUALIFICATION REQUIREMENTS
(PL98-525, SECTION 2319)

STOCK NR (NSN) 1620-00-417-6429LE
NOUN: PISTON ASSY, MLG

PART NUMBER (P/N) 4G11414-107A
AIRCRAFT: C-5

SECTION C

QUALIFICATION REQUIREMENTS THAT MUST BE SATISFIED TO BECOME A QUALIFIED SOURCE:

1. Because of the need for uninterrupted item support to military aircraft systems while keeping with the requirements of PL 98-525, the current acquisition need not and generally will not be delayed to provide an offerer an opportunity to qualify. Normal acquisition practices at OO-ALC should preclude the denial of opportunity to any interested offerer.

2. The offerer must provide a pre-contract award qualification article, which meets the requirements of the engineering drawings, material specifications, and process specifications. However, successful completion of the qualification testing does not guarantee any contract award. If the offerer is deemed qualified and awarded the contract, a post-contract award first ariticle exhibit may be required to verify production capability.

3. The qualification article will be subjected to form, fit, and function verification as well as required testing to assure compliance with data list and other applicable procurement criteria. The qualification article shall demonstrate full compatibility and comparability with existing parts.

4. The required materials will be procured from a qualified source and shall meet the requirements of their respective specifications. The offerer will assure that the supplier has accomplished this and shall submit certified documentation of accomplishment of the above requirements to the purchaser along with the pre-contract award qualification article.

5. The required forgings shall be procured from the qualified forging source using the original certified forging procedures and dies. Forging material and lot qualifications shall be accomplished as required in the specified forging drawings, P/N 4G11424-991A and specification SAE AMS-F-7190, and P/N 4G13774-991A. The offerer shall assure that this is or has been accomplished by the forging source and will submit certified documentation of accomplishment of the above requirements to the government along with the pre-contract award qualification article.

6. The qualification article once submitted will become subject to such testing as deemed necessary by the U.S. Government to prove that the article meets all dimensional, processing and functional requirements. Such testing may result in the destruction of the article. Following completion of necessary testing and evaluation, the article no matter what its condition shall be returned to the contractor or disposed of at his discretion and direction whether it was found acceptable or not.

7. Form verification: The U.S. Government's Quality Verification Center (QVC) will be used to insure compliance with the dimensional requirements of the article. Material and processing compliance will also be verified as required.

8. Fit/function verification: Existing components and government test stands and fixtures will be utilized to verify physical interface and functional performance of articles.

9. Testing for material and process compliance.

(a) Material analysis
(b) Heat treat
(c) Grinding
(d) Plating
(e) Finish
(f) Grain flow
(g) Other

SOURCE QUALIFICATION REQUIREMENTS
(PL98-525, SECTION 2319)

STOCK NR (NSN) 1620-00-417-6429LE
NOUN: PISTON ASSY, MLG

PART NUMBER (P/N4G11414-107A
AIRCRAFT: C-5

10. Remarks:

a. Organic verification capabilities exist at OO-ALC.

b. Testing requirements outside organic capabilities will be contracted out.

11. The estimated cost of government testing and evaluation is $2000

12. Maximum time for testing of the qualification article will not exceed 30 days from receipt at testing agency.

SECTION D

QUALIFICATION WAIVER REQUIREMENTS.

1. An offerer who has had previous experience in the manufacture and qualification of items, which can be correlated with this product, may apply to the design control authority at OO-ALC for a waiver of the above stated qualification requirements.

a. The qualification waiver criteria utilized by the design control authority to perform a qualification analysis are available upon request. The qualification waiver criteria may be used as a guide in preparing the offerer's written input to the design control authority.

b. The burden of proof for written inputs is on the offerer. The design control authority will not pursue authenticity verification of claims made by the offerer of product manufacturing experience with other Government or non-Government agencies. Unsubstantiated claims will not be considered in the waiver analysis process.

c. This waiver will be granted if and only if the design control authority (LGHLE) can establish the qualifications of the offerer through the evaluation of written inputs from the offerer or from previous knowledge of the offerer's capabilities or from previous experience with the offerer on similar item acquisitions. If there is any doubt about the offerer's capability, the offerer will be required to submit a pre-qualification article. There is no guarantee of qualification by similarity. LGHLE reserves the right to require a pre-qualification article of all offerers.

2. The current acquisition need not and will not be delayed in order to provide an offerer with an opportunity to meet the requirements for qualification waiver.

3. Maximum time for approval of qualification by similarity will not exceed 15 days.

REVISION: *04*

ENGINEERING DATA LIST

** DRAFT **

DATE :	DATA TECH :	ORGN SYMBOL :	PR NR :	APPLICATION:	PAGE
10APR02	SCH	LGMPM		KC-135	1 OF 1

CAGE:	MANUFACTURER NAME:	REFERENCE NR:	NOUN :	NSN :
98747	OGDEN AIR LOGISTICS CENTER OGDEN	975509-10	CYLINDER AND PISTON	1620001954810LE

CAGE	DRAWING NUMBER	REV	NR SHEETS	NR CARDS	FURN CODE	DIST CODE	NOUN	REQUIREMENTS
81205	* 63-2030 (P) /	G	0001	0000	S		BUSHING - OUTER CYL NLG	
	/02C0037							ECO
98747	* 975509 (P) /	A	0003	0000	S		OUTER CYL ASSY, SHOCK STR NLG	
	/01A0664							ECO
98747	OO-ALC/LGMPM /		0003	0000	S		ENGR DATA RQMTS (ATTACH A)	
98747	7327021 /	A	0001	0000	S		OUTER CYL NLG	

STANDARD ENGINEERING TEXT

"PROJECT RIGHTS GUARD"

ENGINEERING DATA LIST REMARKS

DRAWING(S) IDENTIFIED BY AN ASTERISK * AND (P) ARE CLAIMED PROPRIETARY AND ARE PROTECTED UNDER THE "RIGHTS GUARD AGREEMENT". THIS DATA MUST BE HANDLED IAW THE RIGHTS GUARD DATA BASIC ORDERING AGREEMENT F34601-92-D-1120

FURNISHED METHOD CODE LEGEND:

C - CLASSIFIED DOCUMENT.
S - FURNISHED WITH SOLICITATION.
M - STABLE BASE DRAWING REQUIRED; FURNISHED WITH CONTRACT AWARD
X - DATA SUPPLIED (NOT IN EDCARS).
R - FURNISHED BY PCD UPON REQUEST.
P - PARTIAL DOCUMENT FURNISHED.
V - VENDOR DRAWING;
G - GOV'T DOCUMENT.
O - OTHERS, CONTRACTOR MUST ACQUIRE.
A - DATA NOT

REV:	ENGINEERING DATA REQUIREMENTS *(ATTACHMENT "A")*

NOTE: MILITARY SPECIFICATIONS I/STANDARDS WILL NOT BE FURNISHED IN THE BID SET.

1. THE FOLLOWING INSTRUCTIONS ARE FURNISHED FOR THE MANUFACTURE OF

OUTER CYLINDER ASSY - SHOCK STRUT, NOSE LANDING GEAR

2. PART NUMBER	3. NATIONAL STOCK NUMBER
975509-10	1620-00-195-4810LE

4. THE FOLLOWING SPECIFICATIONS/STANDARDS, ETC., WILL BE USED IN LIEU OF THE DATA INDICATED. THE SUPERSEDED DATA WILL NOT BE FURNISHED UNLESS SO INDICATED.

5. SHOT PEEN PER **SAE AMS-S-13165** IN LIEU OF MIL-S-13165 PER DRAWING REQUIREMENTS.

6. PERFORM FLUORESCENT PENETRANT INSPECTION PER ASTM E 1417, TYPE I, METHOD B OR C, LEVEL 3 OR 4 IN LIEU OF MIL-S-6866, WITH THE FOLLOWING ACCEPTANCE/REJECTION CRITERIA: **NO DEFECTS ALLOWED**. THE INTENT OF **NO DEFECTS ALLOWED** IS THAT THE INSPECTION IS CONDUCTED AT THE REQUIRED SENSITIVITY LEVEL AND THERE SHALL BE NO INDICATIONS ALLOWED. THE INSPECTOR PERFORMING THE INSPECTION SHALL BE CERTIFIED TO LEVEL II WITH THE INSPECTION PROCEDURE DEVELOPED BY A LEVEL III AS SPECIFIED IN NAS-410.

7. PER DRAWING 975509 USE MATERIAL **SAE AMS 4111** IN LIEU OF AMS 4111.

8. USE **MIL-STD-7179** IN LIEU OF MIL-F-7179.

9. APPLY ONE COAT EPOXY WATERBORNE PRIMER PER **MIL-PRF-85582**, TYPE I, CLASS 2 IN LIEU OF MIL-P-85582 AND M85582-12. ALTERNATE ONE COAT OF EPOXY POLYAMIDE PRIMER PER **MIL-PRF-23377**, TYPE I.

10. APPLY TWO TOPCOATS POLYURETHANE PER **MIL-PRF-85285**, TYPE I, COLOR NUMBER 17925 (WHITE) PER FED-STD-595 IN LIEU OF MIL-C-85285 AND M85285-1.

11. MARK AND IDENTIFY PER **MIL-STD-130** IN LIEU OF BAC 5307, (P/N 63-2030-1).

12. FOR FINISH CODE F-4.202, (DWG 63-2030), CADMIUM PLATE PER **QQ-P-416**, CLASS 3, TYPE I.

13. BAC 5005, BACD 2097 AND DWG 2-5000 ARE NOT REQUIRED FOR MANUFACTURE.

14. INSTALL BUSHINGS PER THE FOLLOWING:

A. THE BUSHING INSTALLATIONS SHALL BE ACCOMPLISHED IN SUCH A MANNER AS TO AVOID DAMAGE TO THE FINISH ON THE I.D. OF THE HOUSING INTO WHICH THE BUSHING IS INSTALLED, OR THE FINISH OF THE O.D. OF THE BUSHING. FORCED INSTALLATION OF SUB-ZERO INSTALLATIONS, SUCH AS THE USE OF A PRESS OR HAMMER IS NOT PERMITTED, AND IS NOT ACCEPTABLE. A SMALL NON-METALLIC HAMMER MAY BE USED TO TAP THE BUSHING INTO ALIGNMENT WITH THE HOUSING BORE, OR TO SEAT THE BUSHING.

B. PRIOR TO BUSHING INSTALLATION, THE PARTS AND HOUSING BORE SHALL BE CLEANED WITH A CLEANING SOLVENT TO REMOVE ALL CONTAMINATION.

C. LIQUID NITROGEN SHALL BE USED FOR ALL SUB-ZERO INSTALLATIONS UNLESS SOME OTHER SUB-ZERO COOLANT IS SPECIFIED, AND APPROVED BY OO-ALC/LILEC ENGINEERING. THE SOAK TIME OF THE BUSHING IN THE LIQUID NITROGEN SHALL BE SUFFICIENT TO ALLOW THE BUSHING TO REACH THE SAME TEMPERATURE AS THE COOLANT.

"PROJECT RIGHTS GUARD"

PREPARED BY	SYMBOL	DATE
CAROL HYER	LGMPM	22 Mar 02

REV:	ENGINEERING DATA REQUIREMENTS CONTINUATION SHEET *(ATTACHMENT "A")*

PART NUMBER	NATIONAL STOCK NUMBER
975509-10	1620-00-195-4810LE

D. THE BUSHING SHALL BE INSTALLED INTO THE HOUSING IMMEDIATELY UPON REMOVAL FROM THE COOLANT WITH AN ABSOLUTE MINIMUM OF LOST TIME. TRIAL RUNS SHALL BE ACCOMPLISHED AS NECESSARY TO MINIMIZE INSTALLATION TIME WHICH SHOULD BE IN THE ORDER OF ABOUT SEVEN (7) SECONDS MAXIMUM.

E. IT MAY OCCASIONALLY BE NECESSARY TO HEAT THE HOUSING INTO WHICH THE BUSHING IS TO BE INSTALLED, IN ADDITION TO SUB-ZERO COOLING OF THE BUSHING. DETAIL PARTS IN PROCESS WILL NOT HAVE PAINT OR SEALANT OR OTHER ORGANIC MATERIAL APPLIED PRIOR TO HEATING, THE PARTS SHALL BE HEATED BY THE USE OF RADIANT HEAT TECHNIQUES, SUCH AS THERMAL BLANKETS, INFRARED LAMPS ETC.; TO THE MAXIMUM TEMPERATURE OF 250 F. TEMPERATURE MEASURING DEVICES SHALL BE USED TO MONITOR HEAT AND SHALL BE LOCATED ON AREAS OF THE PART EXPECTED TO REACH MAXIMUM TEMPERATURE. NO SCALING, OXIDATION, OR CORROSION SHALL BE PERMITTED.

F. BUSHINGS WITHOUT FLANGES SHALL BE INSTALLED INTO HOUSING BORE WHICH HAS RECEIVED A LIGHT COAT OF SEALANT PER MIL-PRF-81733. INSTALL SHRUNKEN BUSHING AND WIPE OFF ANY EXCESS SEALANT THAT MAY HAVE EXTRUDED AROUND THE PERIPHERY OF BOTH ENDS OF THE BUSHINGS.

G. BUSHINGS WITH FLANGES SHALL BE INSTALLED IN A SIMILAR MANNER AS PARAGRAPH (F) EXCEPT SEALANT SHALL ALSO BE APPLIED TO FACE OF LUG UNDER FLANGE. SEALANT SHALL BE APPLIED IN SUCH A MANNER AS TO ENSURE COMPLETE COVERAGE OF INSIDE FACE OF BUSHING FLANGE WHEN BUSHING IS INSTALLED. WIPE OFF ANY EXCESS SEALANT AROUND PERIPHERY OF BUSHING FLANGE. WIPE ANY EXCESS SEALANT FROM OTHER END OF BUSHING ALSO.

H. FOR BUSHINGS WITH EXTERNAL GREASE GROOVES THE INSIDE OF THE LUG WILL BE COATED WITH MIL-C-16173 PRIOR TO BUSHING INSTALLATION AND FACE OF LUG WILL BE COATED WITH MIL-PRF-81733 PER PARAGRAPH G, IF BUSHING IS FLANGED.

15. OO-ALC/LILE SYSTEM ENGINEERING RETAINS ALL RIGHTS TO REVIEW AND ACCEPT MATERIAL REVIEW BOARD'S (MRB'S) DISPOSITIONS PRIOR TO SHIPMENT OF DISCREPANT ITEM. ALL DEVIATIONS, MINOR AND MAJOR, FROM THE ENGINEERING DRAWING PACKAGE SHALL BE SUBMITTED FOR MRB DISPOSITION.

16. PRIOR TO CONTRACT AWARD, THE CONTRACTOR SHALL CERTIFY TO THE GOVERNMENT IN WRITING FULL COMPLIANCE WITH MANUALS, SPECIFICATION, AND STANDARDS CALLED OUT AND REQUIRED FOR THE MANUFACTURE OF THIS CONTRACTED LANDING GEAR COMPONENT/ASSEMBLY. CONTRACTOR IS RESPONSIBLE TO COMPLETELY SEARCH THESE MANUALS, SPECIFICATIONS, AND STANDARDS AND FULLY UNDERSTAND THE REQUIREMENTS NECESSARY TO MANUFACTURE LANDING GEAR COMPONENTS. ANY QUESTIONS CAN BE FORWARDED TO OO-ALC/LILE.

17. AFTER CONTRACT AWARD, THE SUCCESSFUL BIDDER SHALL PROVIDE A COPY OF THE PROCESSING DOCUMENTATION (ROUTING DOCUMENTS AND PROCESS SPECIFICATIONS) TO LILE FOR FINAL REVIEW BEFORE PRODUCTION BEGINS.

"PROJECT RIGHTS GUARD"

PREPARED BY	SYMBOL	DATE
CAROL HYER	LGMPM	22 Mar 02

REV:	ENGINEERING DATA REQUIREMENTS CONTINUATION SHEET *(ATTACHMENT "A")*

PART NUMBER	NATIONAL STOCK NUMBER
975509-10	1620-00-195-4810LE

18. SERIAL NUMBER SHALL BE VIBROPEENED (WITH VIBRATING PNEUMATIC PENCIL) IN 0.09" LETTERS 0.004" - 0.007" DEEP IN THE LOCATION INDICATED. IF THE DRAWING DOES NOT INDICATE A LOCATION, OO-ALC/LILE SHALL PROVIDE S/N LOCATION INSTRUCTIONS. SERIALIZATION OF ITEM SHALL BE ACCOMPLISHED AS FOLLOWS: THE SERIALIZATION SHALL BEGIN WITH THE CAGE OF THE CONTRACTOR NAMED ON THE CONTRACT, FOLLOWED BY A DASH AND THE 2 DIGIT YEAR OF MANUFACTURE, FOLLOWED BY A DASH AND A SEQUENTIALLY UNIQUE 3 DIGIT NUMBER. A CONTRACTOR WHO RECEIVES INTERMITTENT CONTRACTS SHALL START SERIALIZATION OF ITEM WITH THE NEXT NUMBER IN SEQUENCE OF THE PRIOR CONTRACT. IF A CONTRACT PRODUCES MORE THAN 999 ITEMS, THE SERIAL NUMBER SHOULD BEGIN USING 4 DIGIT SERIAL NUMBERS. THE SERIAL NUMBER SHOULD APPEAR LIKE THIS: "S/N **98747-02-001**".

19. PER DRAWING 7327021 FLAG NOTE 11 SHALL READ: -05 OUTER CYLINDER FORGING IS PREFERRED. NEXT ASSY IS DWG **975509-10.**

20. THE FORGING SHALL BE PROCURED FROM THE ORIGINAL FORGING SOURCE, USING THE ORIGINAL CERTIFIED FORGING PROCEDURES AND DIES/TOOLING.

A. PRIOR TO CONTRACT AWARD, THE DETAILED PART BIDDER SHALL PROVIDE CERTIFICATION, FROM THE FORGING SOURCE, TO THE GOVERNMENT THAT THE CERTIFIED DIES AND PROCEDURES ARE AVAILABLE AND THE FORGING SOURCE HAS AN AGREEMENT WITH THE DETAIL PARTS BIDDER TO PROVIDE FORGINGS FOR THEIR USE IN THE EVENT THEY ARE THE SUCCESSFUL BIDDER.

B. PRIOR TO PRODUCTION, FORGING LOT QUALIFICATION SHALL BE ACCOMPLISHED AS SPECIFIED ON THE FORGING DRAWING AND SAE AMS-F-7190 FOR STEEL FORGINGS AND SAE AMS-A-22771 FOR ALUMINUM FORGINGS. THE DETAILED PART CONTRACTOR SHALL ASSURE THAT THIS HAS BEEN ACCOMPLISHED BY THE FORGING SOURCE AND SHALL SUBMIT CERTIFIED DOCUMENTATION OF ACCOMPLISHMENT TO THE GOVERNMENT.

21. FORGING SOURCE, CONTROL OF FORGING DIES AND THE LOCATION OF DIES:

A. FORGING DRAWING: CD7327021-03 (ALCOA DWG)
DIE NUMBE: F-18285

B. CONTROL OF FORGING DIES: U.S. GOV'T ROBINS AFB

C. LOCATION OF FORGING DIES: ALCOA FORGING DIVISION
1600 HARVARD AVENUE
CLEVELAND, OH 44105-3040
PHONE: (216) 641-4202
POC: MIMI

"PROJECT RIGHTS GUARD"

PREPARED BY	SYMBOL	DATE
CAROL HYER	LGMPM	22 Mar 02

SOURCE QUALIFICATION REQUIREMENTS
(PL98-525, SECTION 2319)

STOCK NR (NSN)1620-00-195-4810 LE
NOUN: OUTER CYL. ASSY, NLG

PART NUMBER (P/N)975509-10
AIRCRAFT:KC-135

SECTION C

QUALIFICATION REQUIREMENTS THAT MUST BE SATISFIED TO BECOME A QUALIFIED SOURCE:

1. Because of the need for uninterrupted item support to military aircraft systems while keeping with the requirements of PL 98-525, the current acquisition need not and generally will not be delayed to provide an offeror an opportunity to qualify. Normal acquisition practices at OO-ALC should preclude the denial of opportunity to any interested offeror.

2. The offeror must provide a pre-contract award qualification article, which meets the requirements of the engineering drawings, material specifications, and process specifications. However, successful completion of the qualification testing does not guarantee any contract award. If the offeror is deemed qualified and awarded the contract, a post-contract award first ariticle exhibit may be required to verify production capability.

3. The qualification article will be subjected to form, fit, and function verification as well as required testing to assure compliance with data list and other applicable procurement criteria. The qualification article shall demonstrate full compatibility and comparability with existing parts.

4. The required materials will be procured from a qualified source and shall meet the requirements of their respective specifications. The offeror will assure that the supplier has accomplished this and shall submit certified documentation of accomplishment of the above requirements to the purchaser along with the pre-contract award qualification article.

5. The required forgings shall be procured from the qualified forging source using the original certified forging procedures and dies. Forging material and lot qualifications shall be accomplished as required in the specified forging drawing, P/N 975509-10 and specification MIL-A-22771. The offeror shall assure that this is or has been accomplished by the forging source and will submit certified documentation of accomplishment of the above requirements to the government along with the pre-contract award qualification article.

6. The qualification article once submitted will become subject to such testing as deemed necessary by the U.S. Government to prove that the article meets all dimensional, processing and functional requirements. Such testing may result in the destruction of the article. Following completion of necessary testing and evaluation, the article no matter what its condition shall be returned to the contractor or disposed of at his discretion and direction whether it was found acceptable or not.

7. Form verification: The U.S. Government's Quality Verification Center (QVC) will be used to insure compliance with the dimensional requirements of the article. Material and processing compliance will also be verified as required.

8. Fit/function verification: Existing components and government test stands and fixtures will be utilized to verify physical interface and functional performance of articles.

9. Testing for material and process compliance.
   (a) Material analysis
   (b) Heat treat
   (c) Grinding
   (d) Plating
   (e) Finish
   (f) Grain flow
   (g) Other

SOURCE QUALIFICATION REQUIREMENTS
(PL98-525, SECTION 2319)

STOCK NR (NSN)1620-00-195-4810LE PART NUMBER (P/N)975509-10
NOUN: OUTER CYL. ASSY. NLG AIRCRAFT:KC-135

10. Remarks:

a. Organic verification capabilities exist at OO-ALC.

b. Testing requirements outside organic capabilities will be contracted out.

11. The estimated cost of government testing and evaluation is $2500.00.

12. Maximum time for testing of the qualification article will not exceed 30 days from receipt at testing agency.

SECTION D

QUALIFICATION WAIVER REQUIREMENTS.

1. An offerer who has had previous experience in the manufacture and qualification of items, which can be correlated with this product, may apply to the design control authority at OO-ALC for a waiver of the above stated qualification requirements.

a. The qualification waiver criteria utilized by the design control authority to perform a qualification analysis are available upon request. The qualification waiver criteria may be used as a guide in preparing the offerer's written input to the design control authority.

b. The burden of proof for written inputs is on the offerer. The design control authority will not pursue authenticity verification of claims made by the offerer of product manufacturing experience with other Government or non-Government agencies. Unsubstantiated claims will not be considered in the waiver analysis process.

c. This waiver will be granted if and only if the design control authority (LILE) can establish the qualifications of the offerer through the evaluation of written inputs from the offerer or from previous knowledge of the offerer's capabilities or from previous experience with the offerer on similar item acquisitions. If there is any doubt about the offerer's capability, the offerer will be required to submit a pre-qualification article. There is no guarantee of qualification by similarity. LILE reserves the right to require a pre-qualification article of all offerers.

2. The current acquisition need not and will not be delayed in order to provide an offerer with an opportunity to meet the requirements for qualification waiver.

3. Maximum time for approval of qualification by similarity will not exceed 15 days.