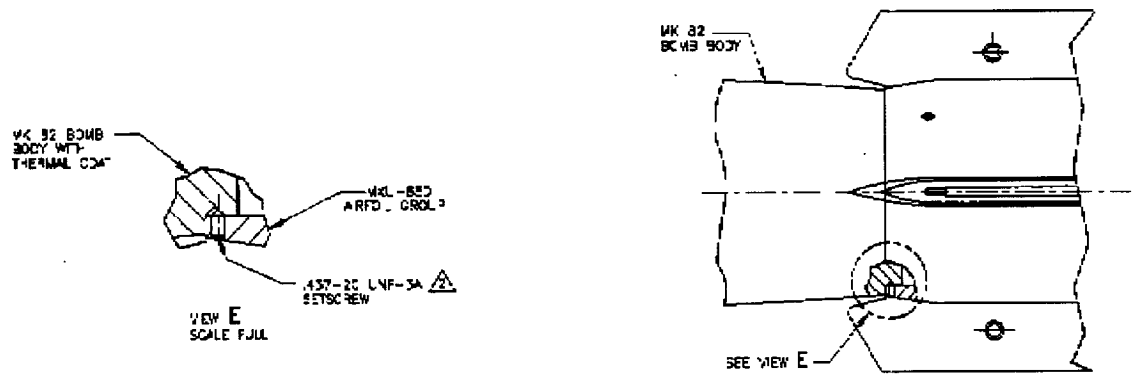

REVISIONS			
REV	DESCRIPTION	DATE	APPROVED

DWG NO. 1393AS186

D 30003 1393AS185 —

SCALE 1/2 | SHEET 2 OF 2

NOTES:

△1 ØY FOR SPECIFIC VALUES SHALL BE PER TABLE 1 CONTOUR SHALL BLEND SMOOTHLY BETWEEN THOSE VALUES. RUNOUT OF ØY WITH RESPECT TO DATUM -A- SHALL NOT EXCEED .187

(M101) △2 ITEMS LISTED IN TABLE 2 SHALL BE TIGHTENED ACCORDING TO THE SCHEDULE SHOWN.

TABLE 1

COORDINATES	
X	ØY
.000 ±.031	4.780 ±.092
.161	5.615
1.792	5.755
2.215	5.955
3.235	6.407
4.282	6.833
6.310	7.585
8.357	8.157
10.405	8.670
12.453	9.118
14.800	9.513

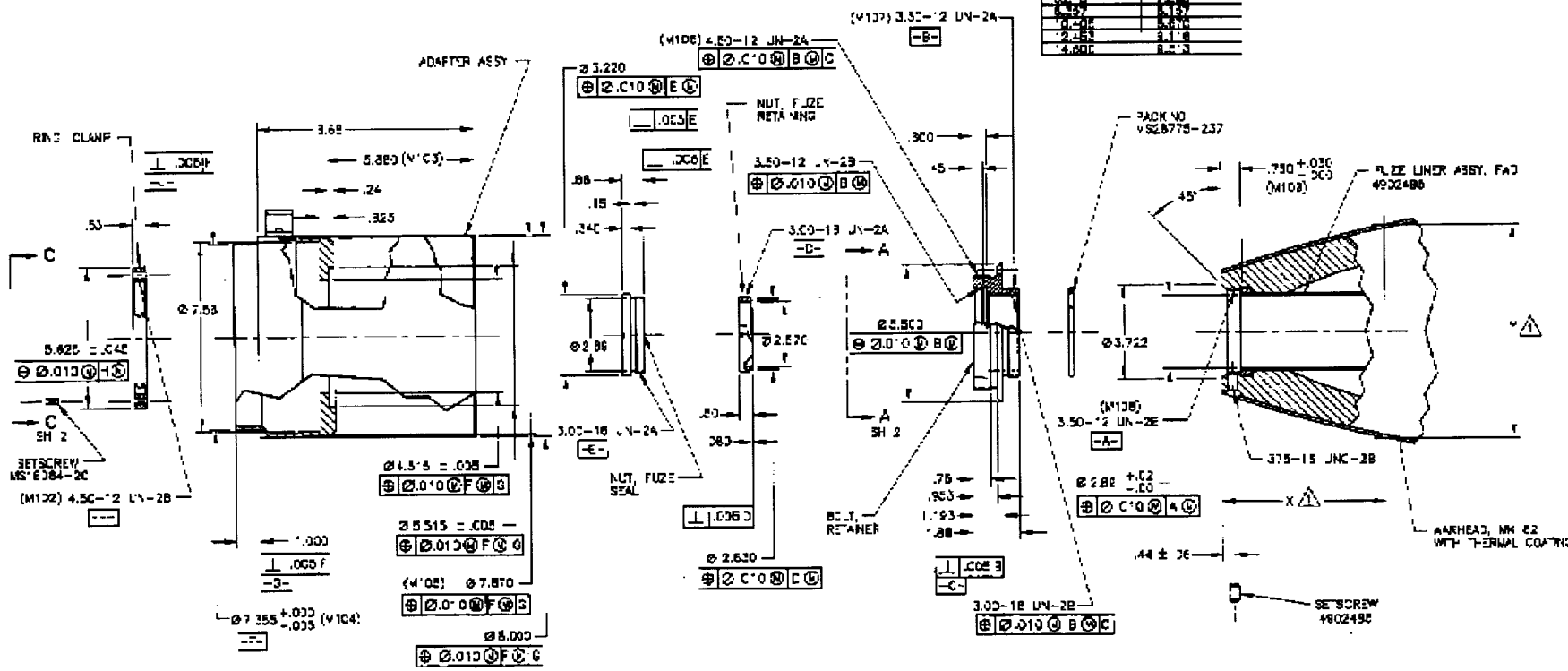

INTERFACE CONTROL DRAWING

CLASSIFICATION OF CHARACTERISTICS (DOD-STD-2101)

CRITICAL - NONE

VALOR - 9

MINOR - NONE

SHEET 1	SHEET 2	NEXT ASSY	USED ON	USED ON
REVISION STATUS OF SHEETS			APPLICATION	

DEPARTMENT OF THE NAVY
NAVAL AIR SYSTEMS COMMAND
WASHINGTON, D.C. 20360

INTERFACE, FORWARD ADAPTER ASSEMBLY TO WARHEAD (MK 82)

D 30003 1393AS182 -

SCALE 1/2 SHEET 1 OF 2

1393AS182

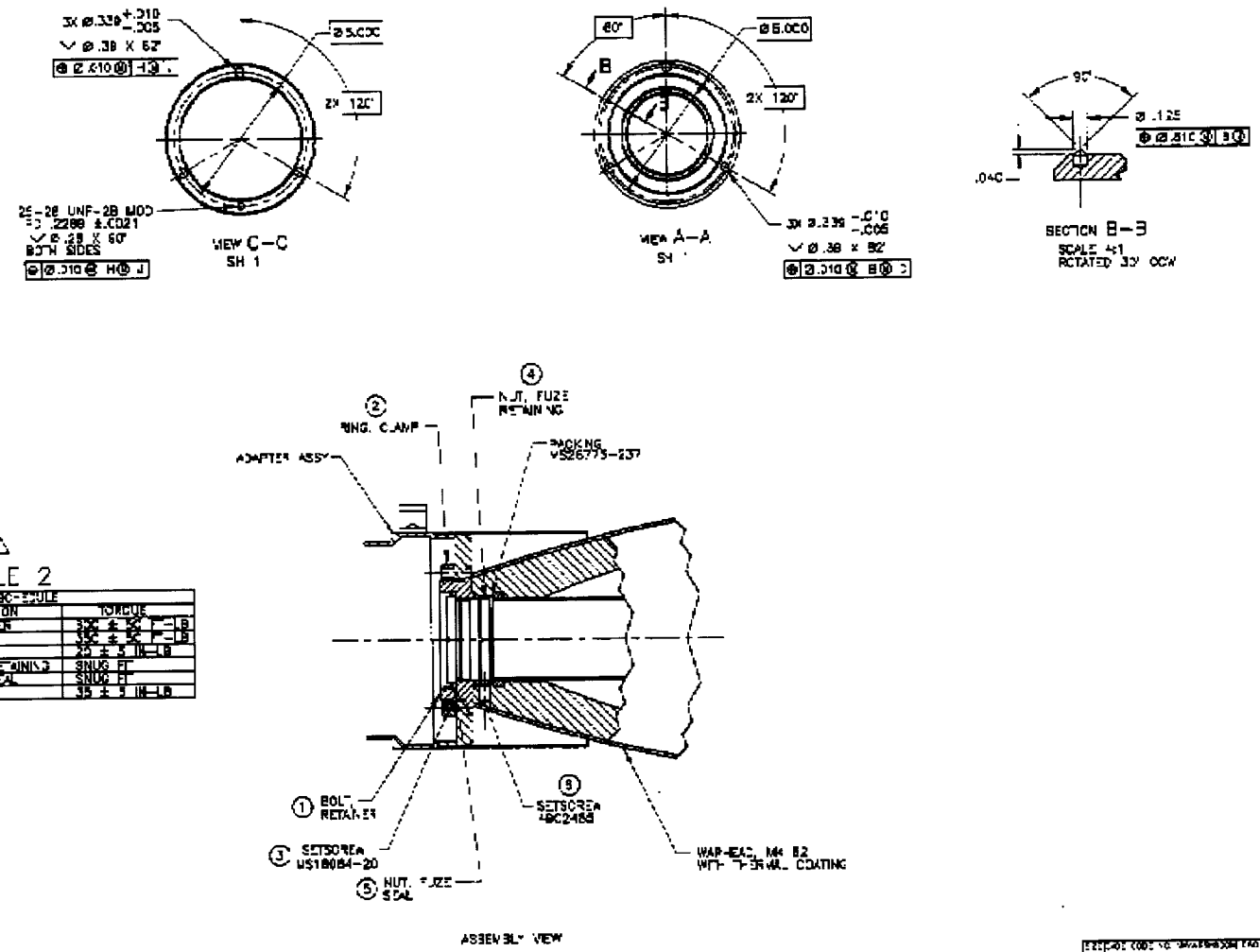

TABLE 2

TORQUE SCHEDULE		
ITEM	DESCRIPTION	TORQUE
1	BOLT, RETAINER	300 ± 50 FT-LB
2	RING, CLAMP	350 ± 50 FT-LB
3	SETSCREW	20 ± 5 IN-LB
4	NUT, FUZE RETAINING	SNUG FIT
5	NUT, FUZE SEAL	SNUG FIT
6	SETSCREW	35 ± 5 IN-LB

SIZE	CODE IDENT NO.	DRAWING NO.	REV
D	30003	1393AS182	—
SCALE 1/2		SHEET 2	

1393AS182

NOTES:

1. (1) FOR SPECIFIC VALUES SHALL BE PER TABLE 1. CONTOUR SHALL BLEND SMOOTHLY BETWEEN THOSE VALUES. RUNOUT OF Ø WITH RESPECT TO DATUM -A- SHALL NOT EXCEED .187
2. (M101) ITEMS LISTED IN TABLE 2 SHALL BE TIGHTENED ACCORDING TO THE SCHEDULE SHOWN

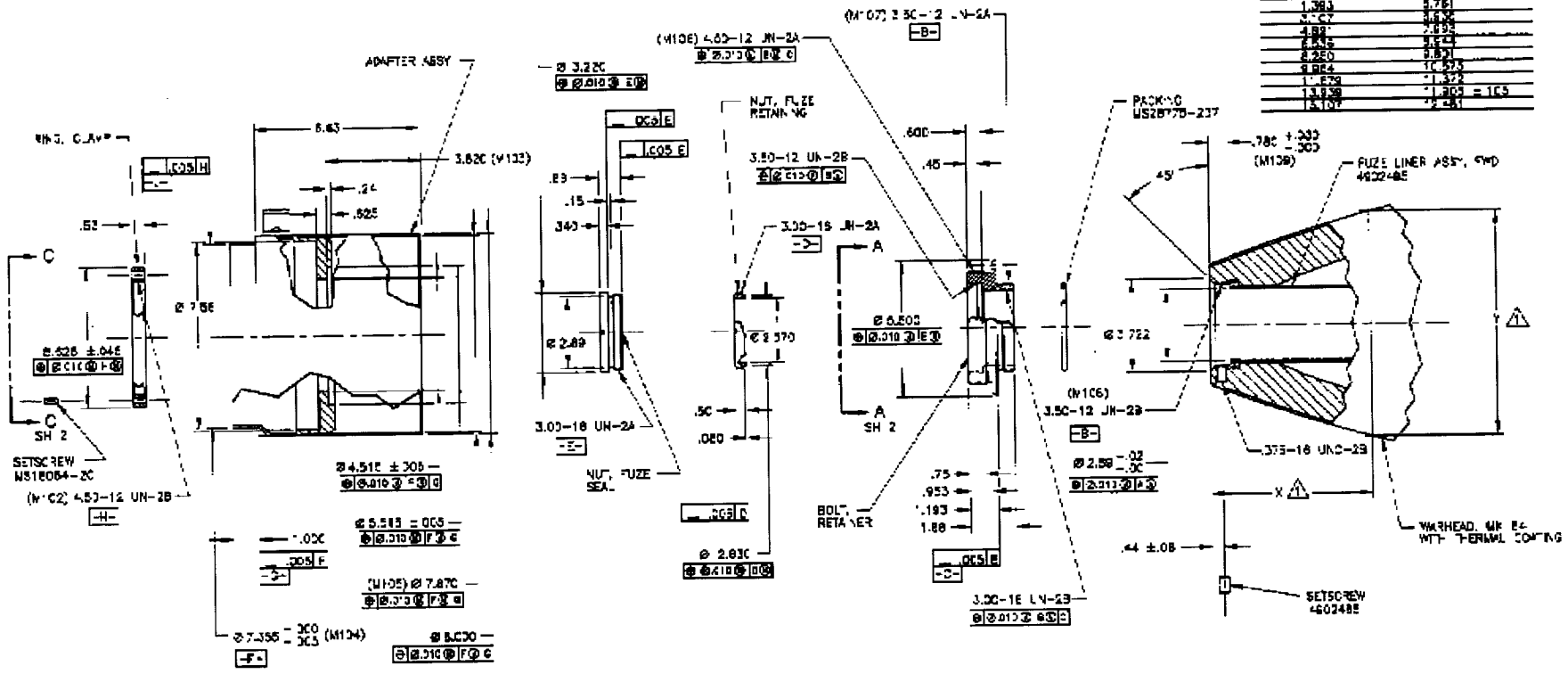

TABLE 1

COORDINATES	
X	ØY
0.00 ±.002	4.715 ±.007
1.383	5.761
[illegible]	[illegible]
4.88[illegible]	[illegible]
[illegible]	[illegible]
8.250	9.891
9.864	10.573
11.679	11.372
13.838	11.805 = .105
15.107	[illegible]

INTERFACE CONTROL DRAWING

CLASSIFICATION OF CHARACTERISTICS (DOD-STD-2131)

CRITICAL – NONE

MAJOR – 9

MINOR – NONE

DISTRIBUTION STATEMENT A: DISTRIBUTION AUTHORIZED TO THE DOD AND DOD CONTRACTORS ONLY BECAUSE EXPORT OF THE DATA IS RESTRICTED INFORMATION. ALL OTHER REQUESTS SHALL BE REFERRED TO NAVAL AIR WARFARE CENTER WEAPONS DIVISION, CHINA LAKE, CA 93555.

WARNING – THIS DOCUMENT CONTAINS TECHNICAL DATA WHOSE EXPORT IS RESTRICTED BY THE ARMS EXPORT CONTROL ACT, TITLE 22, U.S.C. 2751-2794, ITS ASSIGNED EXPORT CONTROL NUMBER UNDER ACT OF 1979, AS AMENDED, TITLE 50, U.S.C. APP. 2401-2420, VIOLATIONS OF THESE EXPORT LAWS ARE SUBJECT TO SEVERE CRIMINAL PENALTIES. DISSEMINATE IN ACCORDANCE WITH PROVISIONS OF DOD DIRECTIVE 5230.25.

DESTRUCTION NOTICE – WHEN THIS DATA IS NO LONGER NEEDED DESTROY IT BY ANY MEANS WHICH WILL PREVENT DISCLOSURE OF CONTENTS OR RECONSTRUCTION OF THE DOCUMENT.

SHEET 1	SHEET 2	NEXT ASSY	USED ON	USED ON

REQUIRED SHEETS OF SHEETS

APPLICATION

UNLESS OTHERWISE SPECIFIED
DIMENSIONS ARE IN INCHES
TOLERANCES
WHOLE #
DECIMAL ±0.005
ANGLES ±0.25°
PART SHALL BE FREE OF BURRS
SURFACE ROUGHNESS 125

INTERFACE DRAWING IS IN ACCORDANCE APN NL-010-90 MIL-HDBK-245

DO NOT SCALE THIS DRAWING

DRAWN	JAN	05 JAN 93
CHK	[illegible]	[illegible]
STRESS	[illegible]	[illegible]
DESIGN	[illegible]	[illegible]
APPROVED	[illegible]	[illegible]

DEPARTMENT OF THE NAVY
NAVAL AIR SYSTEMS COMMAND
WASHINGTON, D.C. 20360

NAVAL AIR WARFARE CENTER
WEAPONS DIVISION
CHINA LAKE, CALIFORNIA 93555

INTERFACE, FORWARD ADAPTER ASSEMBLY TO WARHEAD (MK 84)

CODE IDENT NO.	SIZE	DRAWING NO.	REV
D30003		1393AS183	–

SCALE 1/2 | LOCATE 1393AS183001 | SHEET 1 OF 2

DWG NO. 1393AS183

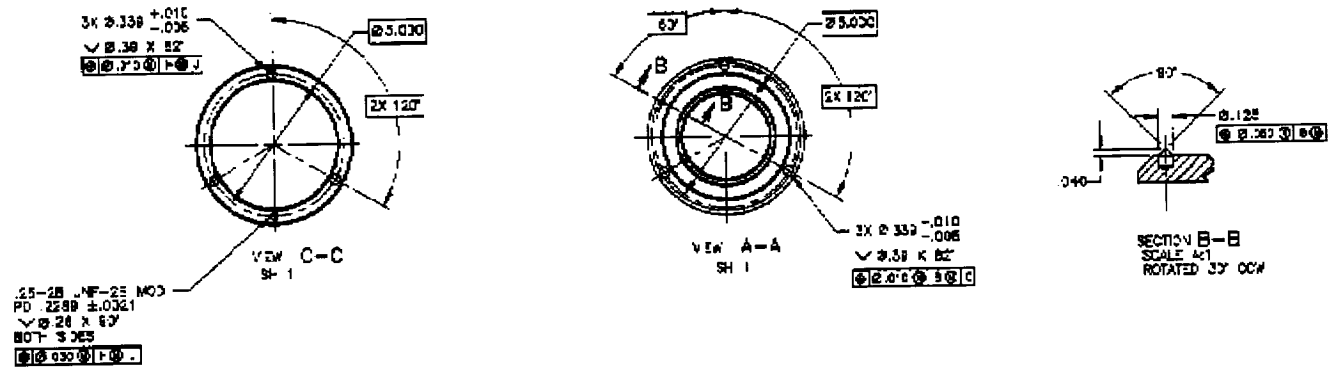

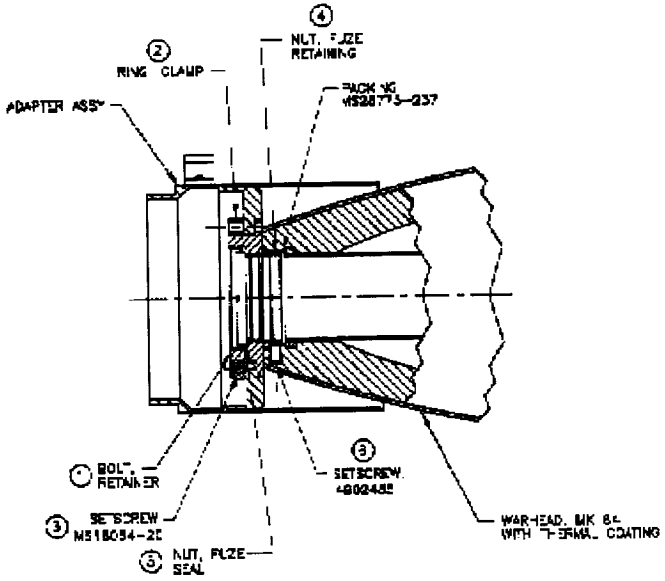

ASSEMBLY VIEW

TABLE 2

CIRCLE SCHEDULE

ITEM	DESCRIPTION	TORQUE
1	BOLT, RETAINER	600 ± 60 FT-LB
2	RING, CLAMP	360 ± 60 FT-LB
3	SETSCREW	20 ± 5 IN-LB
4	NUT, FUZE RETAINING	SNUG FIT
5	NUT, FUZE SEAL	SNUG FIT
6	SETSCREW	25 ± 5 IN-LB

SIZE	CAGE CODE NO.	NAVWEPSTEC DWG NO.	REV
D	30003	1393AS183	—

SCALE 1/2 SHEET 1

1393AS183

NOTES:

1. DATUM A-B IS DEFINED AS AN AXIS THROUGH THE 2.00-8UN-2B PITCH Ø AT THE AFT END AND THE 2.500-12 UN-2B PITCH Ø ON THE FORWARD END OF THE MK 83 BOMB BODY.
2. TIGHTEN SETSCREWS TO 350 ± 50 N-LBS.
3. DATUM K IS DEFINED AS THE 1.7500-12 UN-2B THREAD OF THE BOMB BODY FORWARD SUSPENSION LUG HOLE.

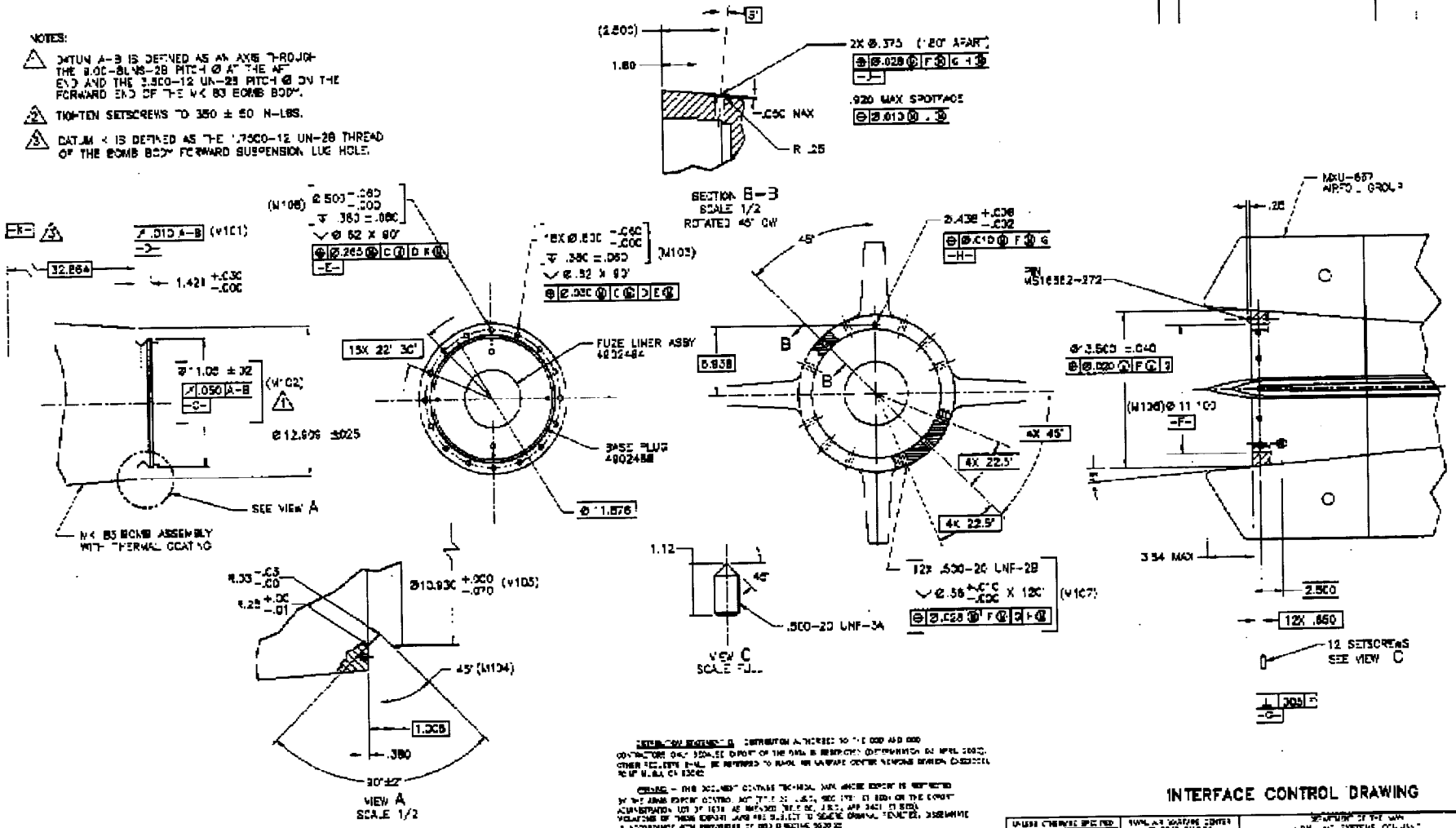

CLASSIFICATION OF CHARACTERISTICS (DOD-STD-2101)

CRITICAL – NONE

MAJOR – 9

MINOR – NONE

INTERFACE CONTROL DRAWING

SHEET 1	SHEET 2	NEXT ASSY	USED ON
REVISION STATUS OF SHEETS		APPLICATION	

NAVAL AIR WARFARE CENTER
WEAPONS DIVISION
CHINA LAKE, CALIFORNIA 93555

DEPARTMENT OF THE NAVY
NAVAL AIR SYSTEMS COMMAND
WASHINGTON, DC 20360

INTERFACE, AIRFOIL GROUP TO WARHEAD (MK 83)

D 30003 | 1393AS1B4 | —

SCALE 1/4 | SHEET 1 OF 2

1393AS1B4

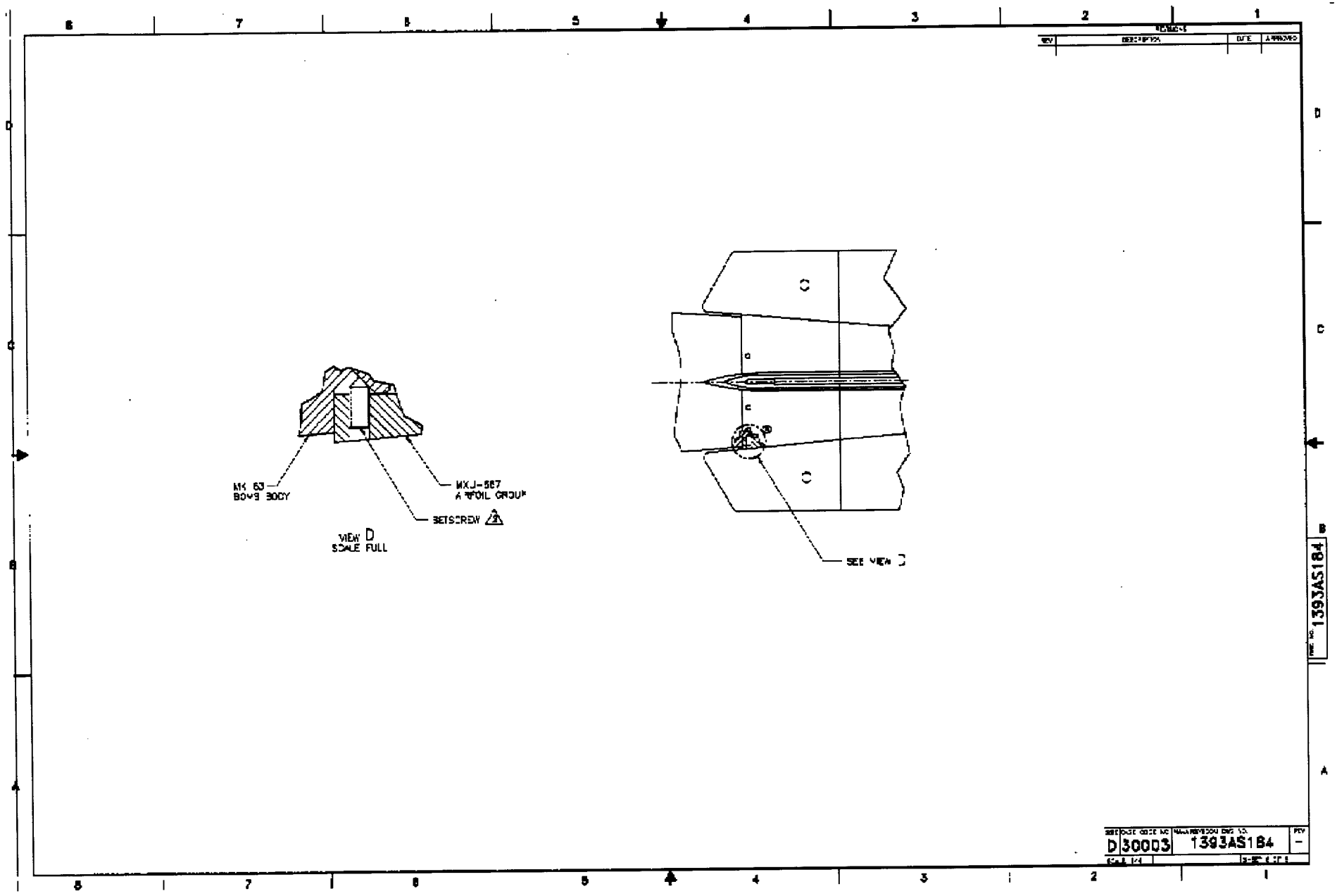

MK 63
BOMB BODY
MXU-567
AIRFOIL GROUP
SETSCREW
VIEW D
SCALE FULL
SEE VIEW D
REVISIONS
REV
DESCRIPTION
DATE
APPROVED
D
30003
1393AS184
REV
-
1393AS184

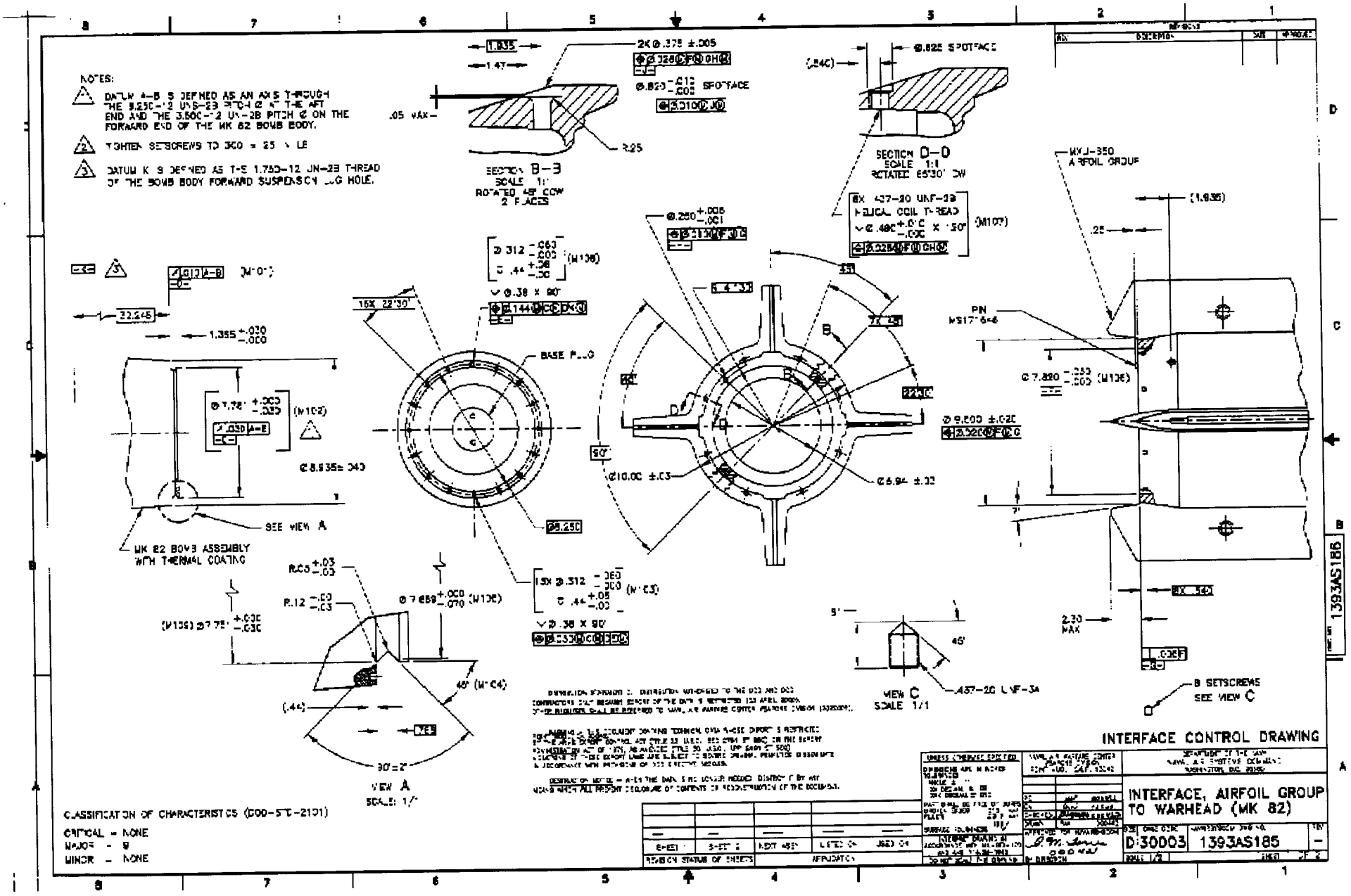
NOTES:
DATUM A-B IS DEFINED AS AN AXIS THROUGH THE 9.250-12 UNS-2B PITCH Ø AT THE AFT END AND THE 3.500-12 UN-2B PITCH Ø ON THE FORWARD END OF THE MK 82 BOMB BODY.
TIGHTEN SETSCREWS TO 300 ± 25 IN LB
DATUM K IS DEFINED AS THE 1.750-12 UN-2B THREAD OF THE BOMB BODY FORWARD SUSPENSION LUG HOLE.
SECTION B-B
SCALE 1:1
ROTATED 45° CCW
2 PLACES
SECTION D-D
SCALE 1:1
ROTATED 65°30' CW
MXU-350
AIRFOIL GROUP
BASE PLUG
SEE VIEW A
MK 82 BOMB ASSEMBLY WITH THERMAL COATING
VIEW A
SCALE: 1/1
VIEW C
SCALE 1/1
B SETSCREWS
SEE VIEW C
INTERFACE CONTROL DRAWING
INTERFACE, AIRFOIL GROUP TO WARHEAD (MK 82)
D30003
1393AS185
CLASSIFICATION OF CHARACTERISTICS (DOD-STD-2101)
CRITICAL - NONE
MAJOR - 9
MINOR - NONE
REVISION STATUS OF SHEETS
APPLICATION
1393AS186

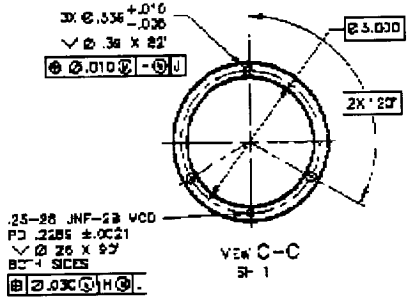

VIEW C-C
SH 1

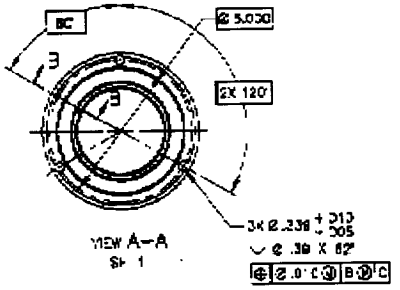

VIEW A-A
SH 1

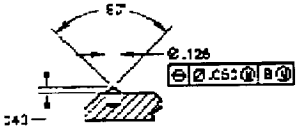

SECTION B-B
SCALE 4:1
ROTATED 30° CCW

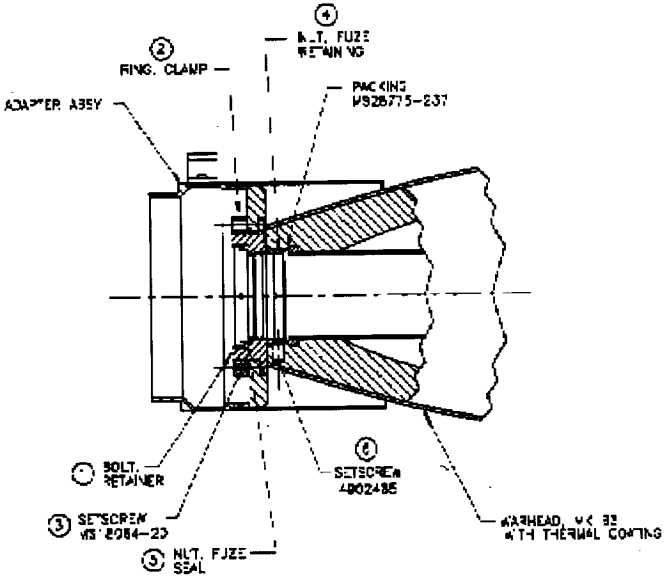

ASSEMBLY VIEW

TABLE 2

CRUDE SCHEDULE		
ITEM	DESCRIPTION	TORQUE
1	BOLT, RETAINER	502 ± 33 FT-LB
2	RING, CLAMP	335 ± 35 FT-LB
3	SETSCREW	20 ± 5 IN-LB
4	NUT, FUZE RETAINING	[illegible] FT
5	NUT, FUZE SEAL	[illegible] FT
6	SETSCREW	25 ± 5 IN-LB

REV	DESCRIPTION	DATE	APPROVED

D30003 1393AS181

1393AS181

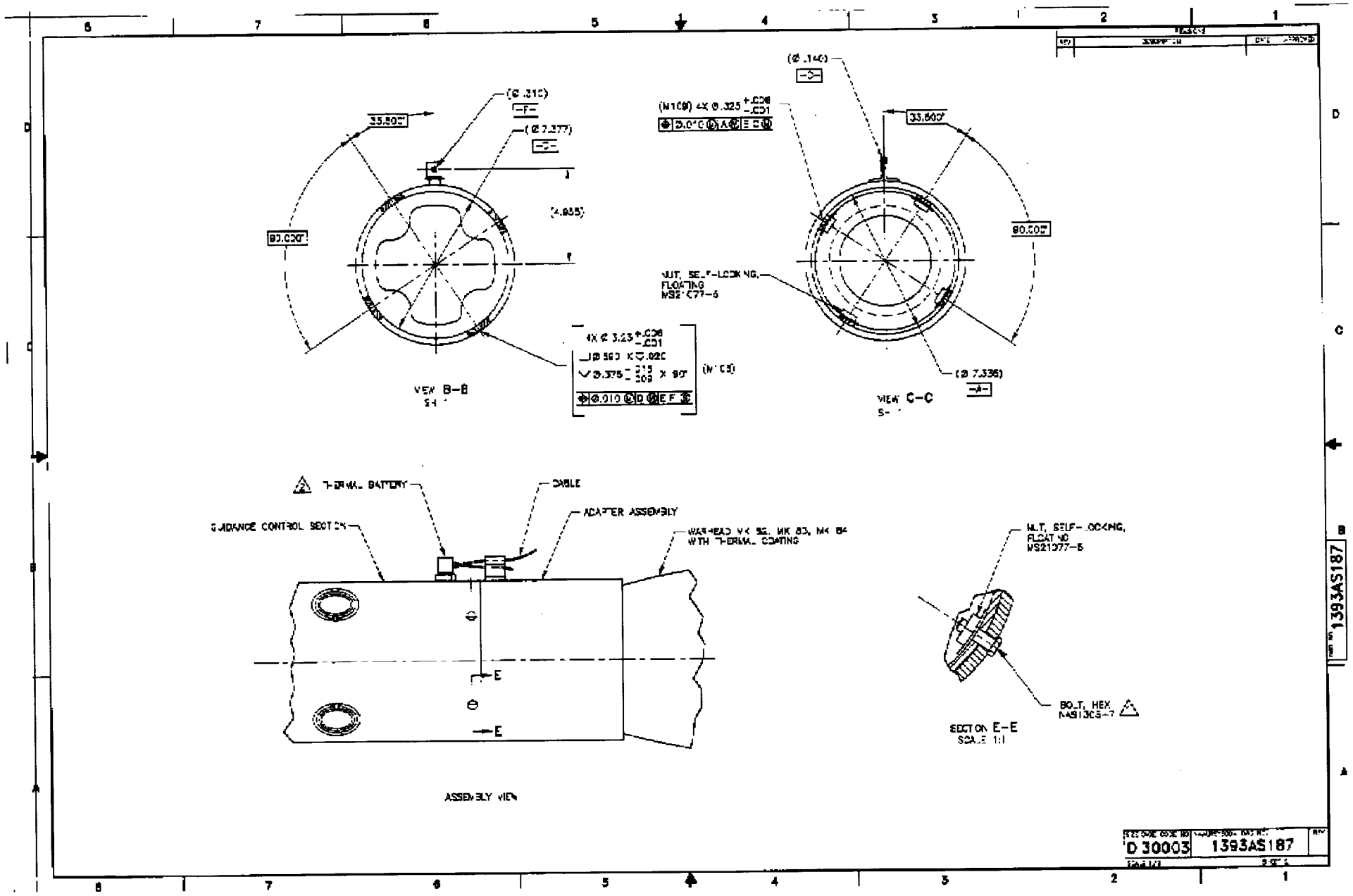

VIEW B-B
VIEW C-C
NUT, SELF-LOCKING, FLOATING MS21077-6
THERMAL BATTERY
CABLE
ADAPTER ASSEMBLY
GUIDANCE CONTROL SECTION
WARHEAD MK 82, MK 83, MK 84 WITH THERMAL COATING
ASSEMBLY VIEW
SECTION E-E
SCALE 1:1
BOLT, HEX
D 30003
1393AS187

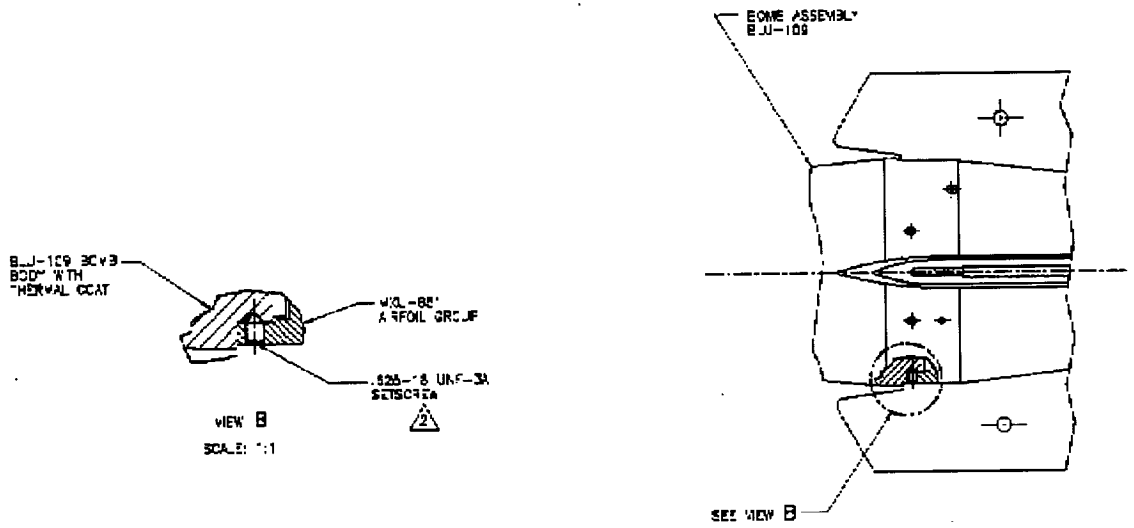

D30003	1393AS190	-

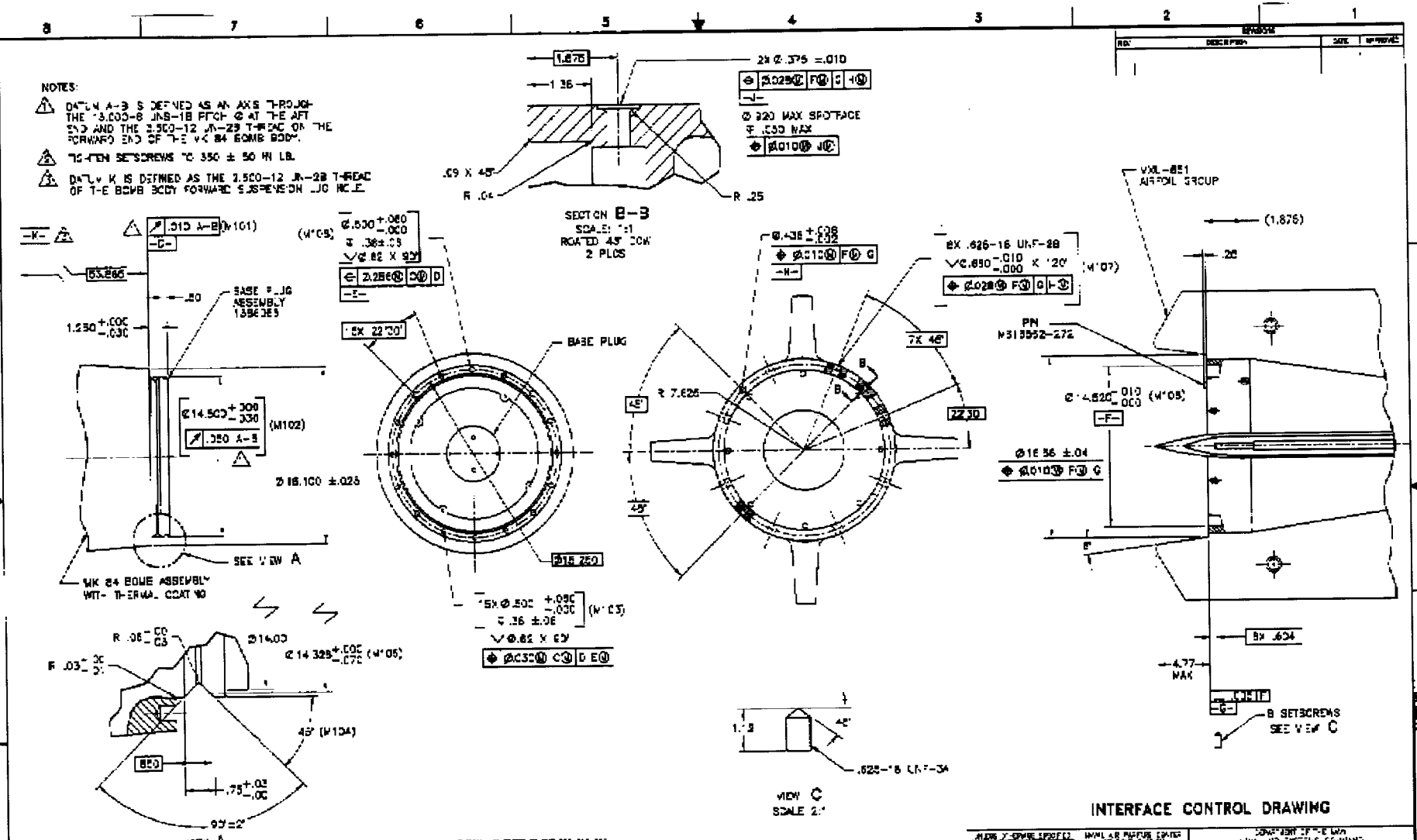
NOTES:
DATUM A-B IS DEFINED AS AN AXIS THROUGH THE 13.000-8 UNS-1B PITCH Ø AT THE AFT END AND THE 2.500-12 UN-2B THREAD ON THE FORWARD END OF THE MK 84 BOMB BODY.
TIGHTEN SETSCREWS TO 350 ± 50 IN LB.
DATUM K IS DEFINED AS THE 2.500-12 UN-2B THREAD OF THE BOMB BODY FORWARD SUSPENSION LUG NUT.
SECTION B-B
SCALE: 1:1
ROTATED 45° CCW
2 PLCS
BASE PLUG ASSEMBLY 1396365
BASE PLUG
SEE VIEW A
MK 84 BOMB ASSEMBLY WITH THERMAL COATING
VIEW A
SCALE 2:1
VIEW C
SCALE 2:1
WXL-851 AIRFOIL GROUP
PN M313552-272
8 SETSCREWS
SEE VIEW C
INTERFACE CONTROL DRAWING
INTERFACE, AIRFOIL GROUP TO WARHEAD (MK84)
D 30003
1393AS188
CLASSIFICATION OF CHARACTERISTICS (DOD-STD-2101)
CRITICAL - NONE
MAJOR - 8
MINOR - NONE

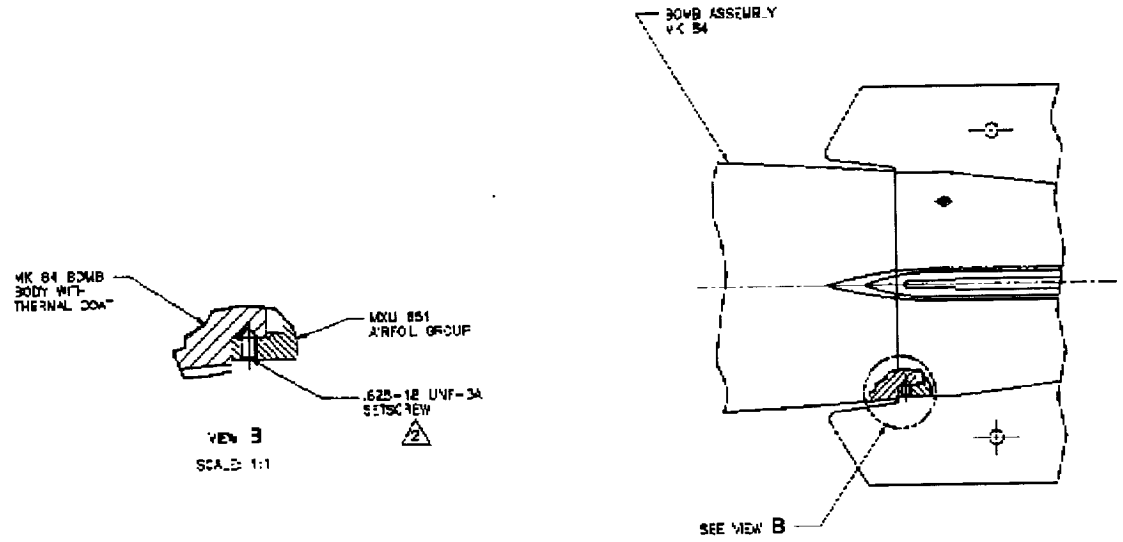

REV	DESCRIPTION	DATE	APPROVED
	REVISIONS		

SIZE	CAGE CODE	DRAWING NO.	REV
D	30003	1393AS186	—

SCALE 1/4 SHEET 2 OF 2

1393AS186

NOTES:

(M101) ⚠1 TIGHTEN BOLTS (4 PLACES) TO 150 ± 25 IN-LB.

(M102) ⚠2 AN ARMING PIN PULL FORCE OF 60 ± 20 LB SHALL BE OBTAINED BY AN INTERNAL SHEAR PIN MECHANISM.

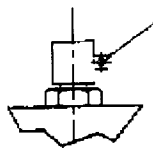

VIEW D
SCALE 1:1

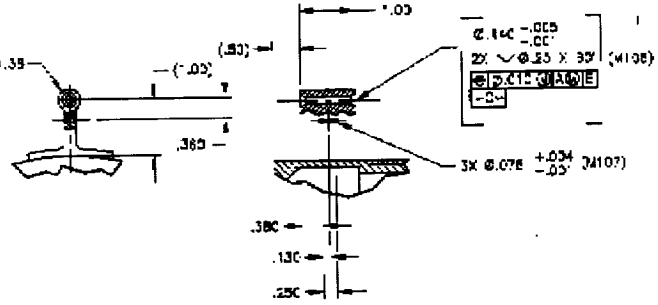

VIEW A
SCALE 1:1

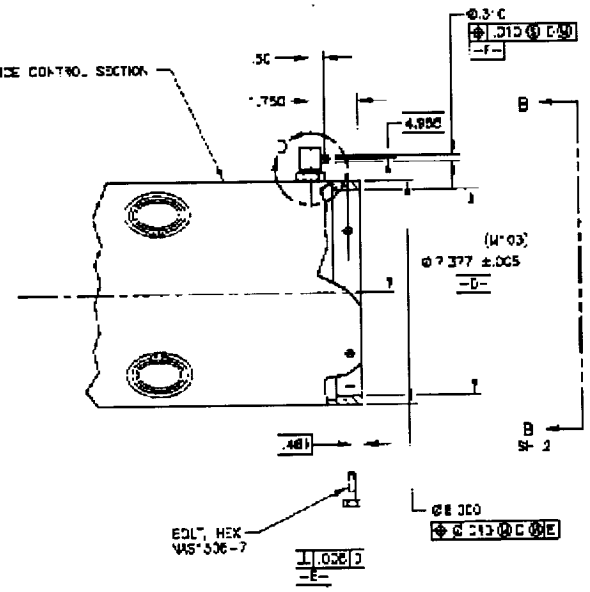

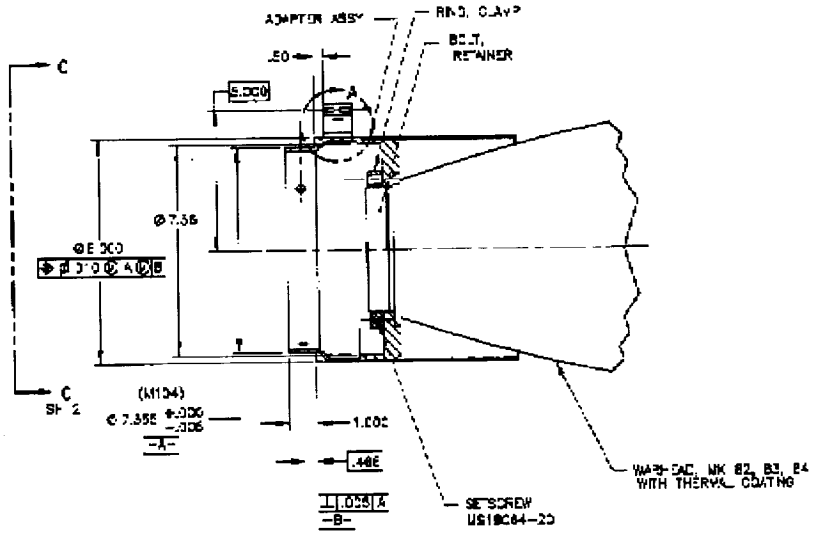

INTERFACE CONTROL DRAWING

CLASSIFICATION OF CHARACTERISTICS
(DOD-STD-2131)

CRITICAL — NONE

MAJOR — 9

MINOR — NONE

DISTRIBUTION STATEMENT A: DISTRIBUTION AUTHORIZED TO THE DOD AND DOD CONTRACTORS ONLY. REQUEST SHALL BE REFERRED TO NAVAL AIR WARFARE CENTER WEAPONS STATION, CHARLESTON, NORTH CHARLESTON, SC 29406.

WARNING — THIS DOCUMENT CONTAINS TECHNICAL DATA WHOSE EXPORT IS RESTRICTED BY THE ARMS EXPORT CONTROL ACT (TITLE 22, U.S.C. SEC 2751 ET SEQ.) OR THE EXPORT ADMINISTRATION ACT OF 1979, AS AMENDED (TITLE 50, U.S.C. APP. 2401 ET SEQ.). VIOLATIONS OF THESE EXPORT LAWS ARE SUBJECT TO SEVERE CRIMINAL PENALTIES. DISSEMINATE IN ACCORDANCE WITH PROVISIONS OF DOD DIRECTIVE 5230.25.

DESTRUCTION NOTICE — FOR CLASSIFIED DATA, DESTROY BY ANY METHOD THAT WILL PREVENT DISCLOSURE OF CONTENTS OR RECONSTRUCTION OF THE DOCUMENT.

SHEET 1	SHEET 2	NEXT ASSY	USED ON	USED ON
REVISION STATUS OF SHEETS			APPLICATION	

UNLESS OTHERWISE SPECIFIED
DIMENSIONS ARE IN INCHES
TOLERANCES
ANGLE ± 1°
DECIMAL ± .005
DECIMAL ± .010
DECIMAL ± .030
FOR FINAL BLEED TYPE SEE SPECIFICATION
FINISH SCHEME 200-44
FINISH 200-44
SURFACE ROUGHNESS 250

MATERIAL NO. 4-4-1-1-1-1-1-1
ASS 481 (14 Mil-1-1-1-1)
NO DIMENSIONS ON FINISH

NAVAL AIR WARFARE CENTER
LAKEHURST DIVISION
TO NW W.W. DALE, ESQ.

DR		
CH		
CHECKED		
SMART		
APPROVED		

DEPARTMENT OF THE NAVY
NAVAL AIR SYSTEMS COMMAND
WASHINGTON, D.C. 20360

INTERFACE, FORWARD ADAPTER ASSEMBLY TO GUIDANCE CONTROL SECTION

CAGE CODE D30003 — DRAWING NO. 1393AS187 — REV -

SCALE 1/2 — SCALE 1/2 — SHEET 1 OF 1

1393AS187

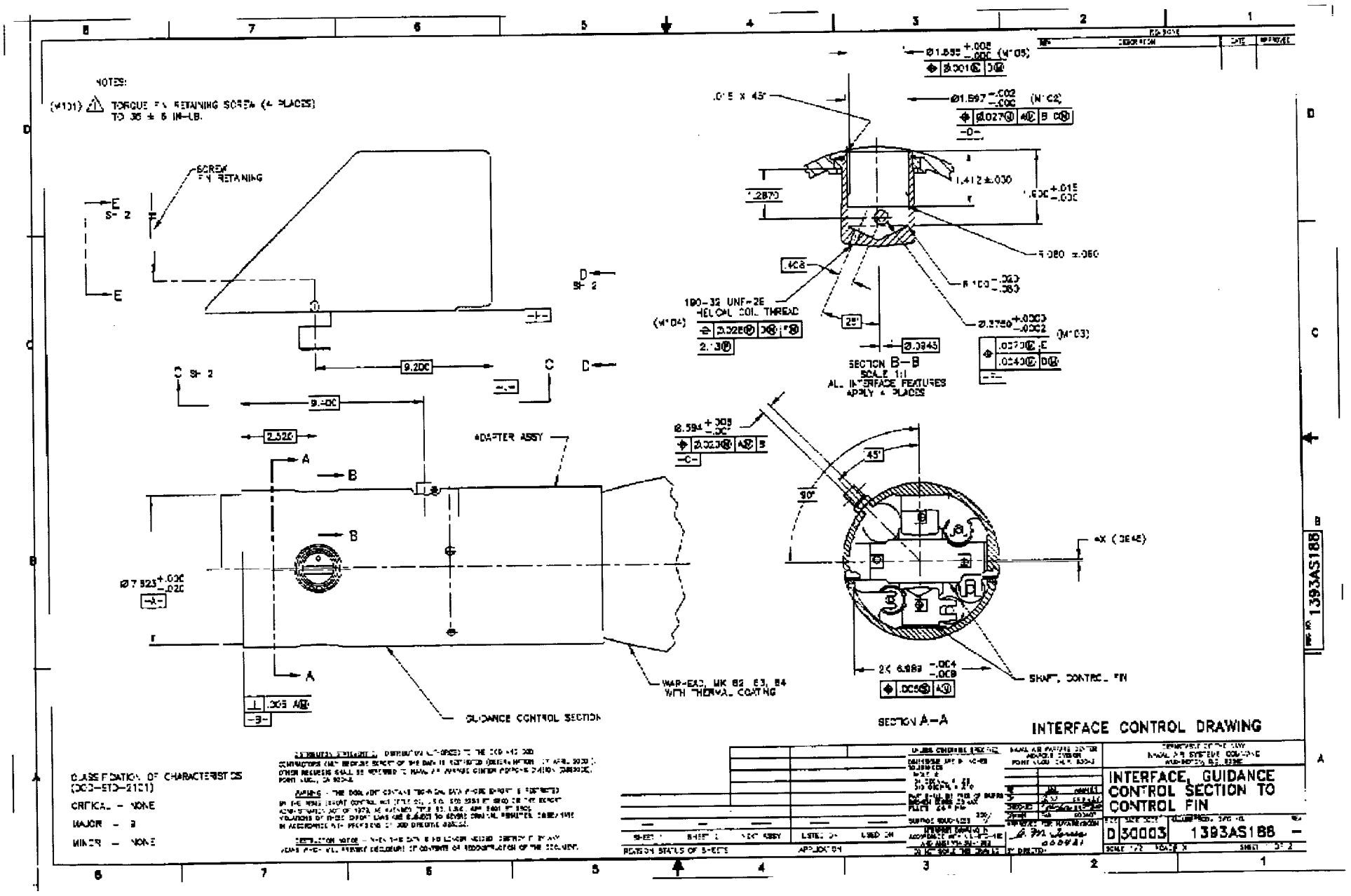
NOTES:
(M101) TORQUE FIN RETAINING SCREW (4 PLACES) TO 36 ± 6 IN-LB.
SCREW FIN RETAINING
ADAPTER ASSY
GUIDANCE CONTROL SECTION
WARHEAD, MK 82, 83, 84 WITH THERMAL COATING
SECTION B-B
SCALE 1:1
ALL INTERFACE FEATURES APPLY 4 PLACES
190-32 UNF-2E HELICAL COIL THREAD
SECTION A-A
SHAFT, CONTROL FIN
INTERFACE CONTROL DRAWING
CLASSIFICATION OF CHARACTERISTICS (DOD-STD-2101)
CRITICAL - NONE
MAJOR - 9
MINOR - NONE
INTERFACE, GUIDANCE CONTROL SECTION TO CONTROL FIN
D 30003 1393AS188
1393AS188

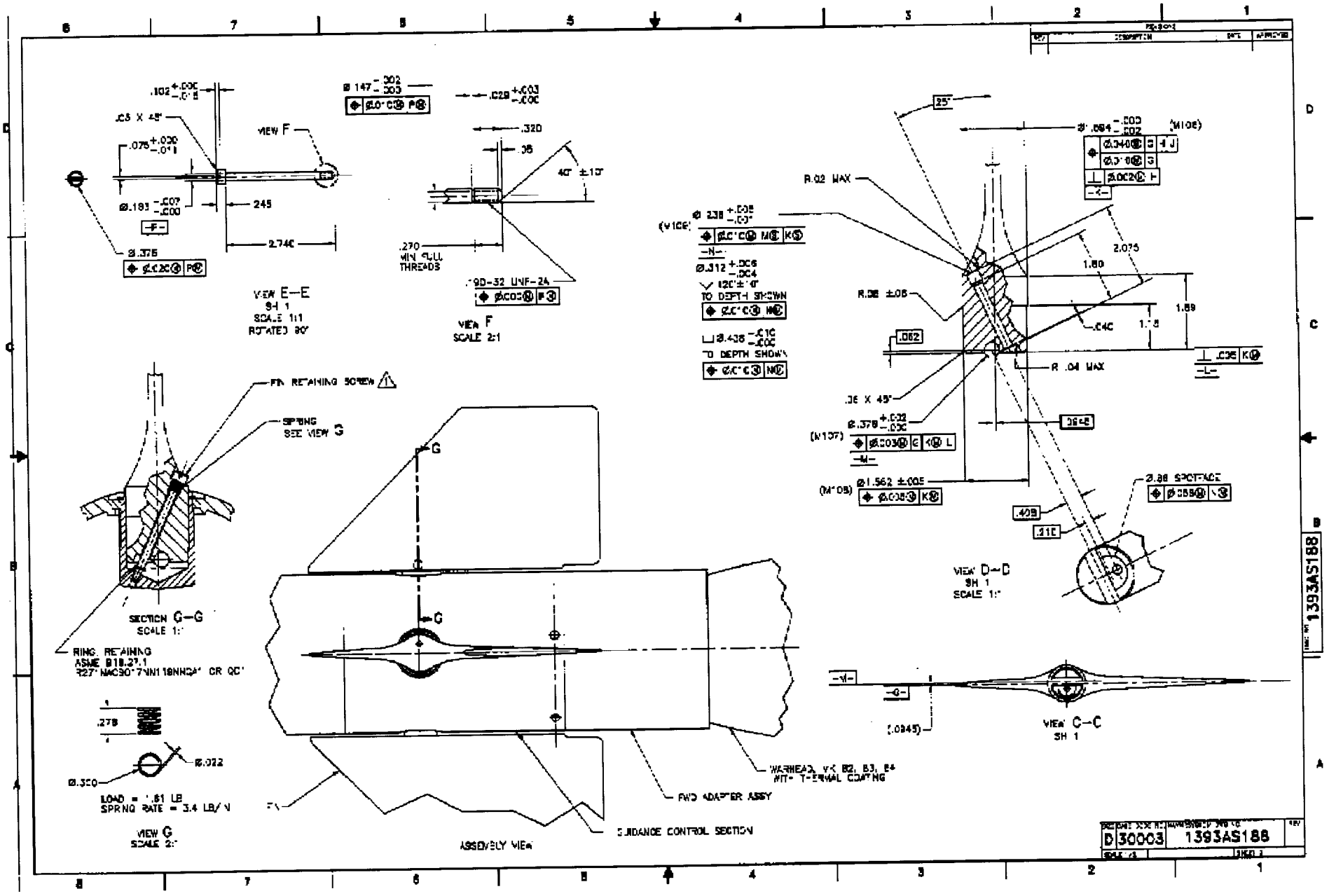
VIEW E–E
SH 1
SCALE 1:1
ROTATED 90°
VIEW F
SCALE 2:1
VIEW D–D
SH 1
SCALE 1:1
VIEW C–C
SH 1
SECTION G–G
SCALE 1:1
RING, RETAINING
ASME B18.27.1
VIEW G
SCALE 2:1
ASSEMBLY VIEW
FWD ADAPTER ASSY
GUIDANCE CONTROL SECTION
D30003
1393AS188

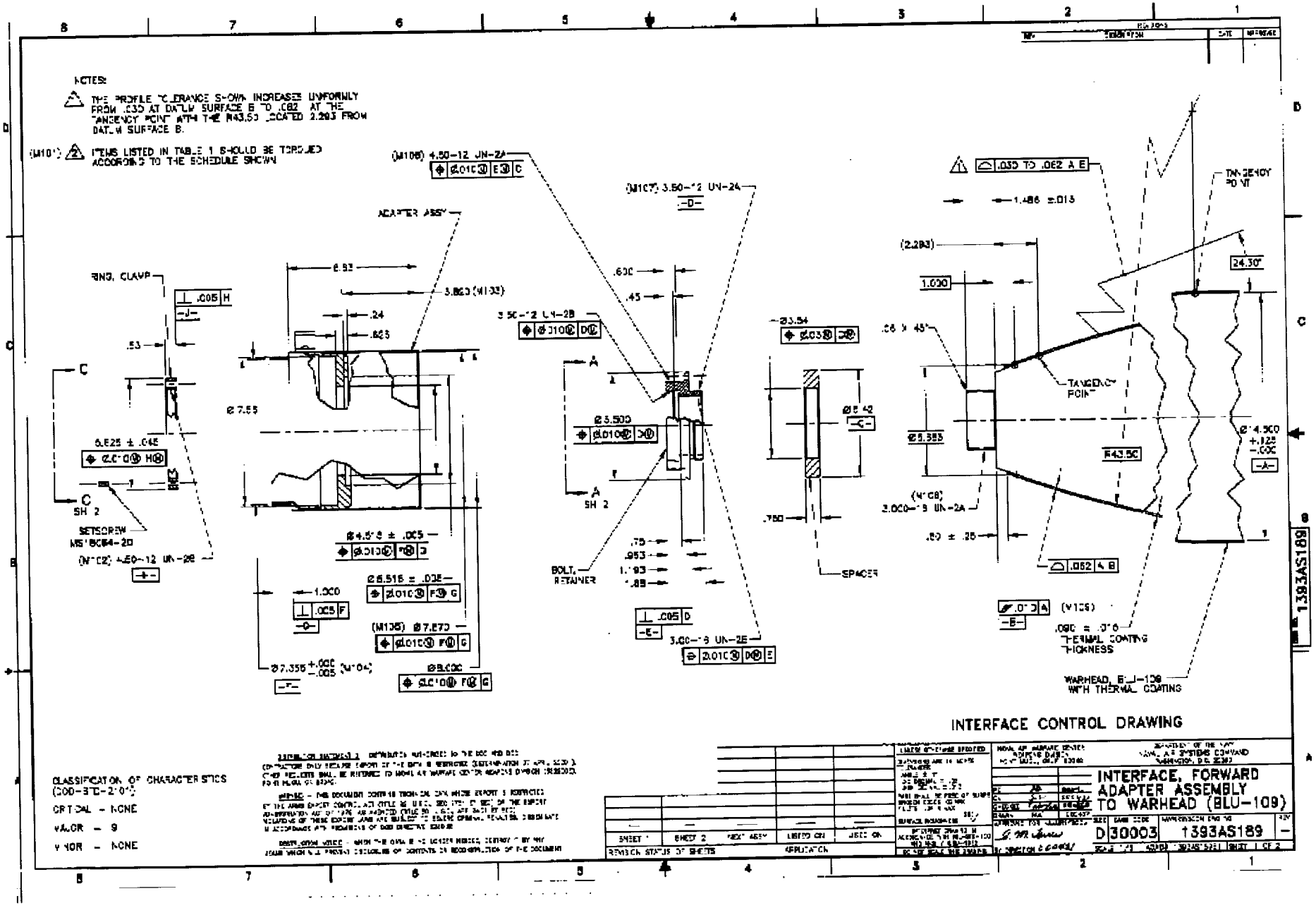
NOTES:
THE PROFILE TOLERANCE SHOWN INCREASES UNIFORMLY FROM .030 AT DATUM SURFACE B TO .062 AT THE TANGENCY POINT WITH THE R43.50 LOCATED 2.293 FROM DATUM SURFACE B.
(M101) ITEMS LISTED IN TABLE 1 SHOULD BE TORQUED ACCORDING TO THE SCHEDULE SHOWN
RING, CLAMP
SETSCREW
ADAPTER ASSY
BOLT, RETAINER
SPACER
TANGENCY POINT
THERMAL COATING THICKNESS
WARHEAD, BLU-109 WITH THERMAL COATING
INTERFACE CONTROL DRAWING
CLASSIFICATION OF CHARACTERISTICS (DOD-STD-2101)
CRITICAL - NONE
MAJOR - 9
MINOR - NONE
INTERFACE, FORWARD ADAPTER ASSEMBLY TO WARHEAD (BLU-109)
D 30003
1393AS189
1393AS189

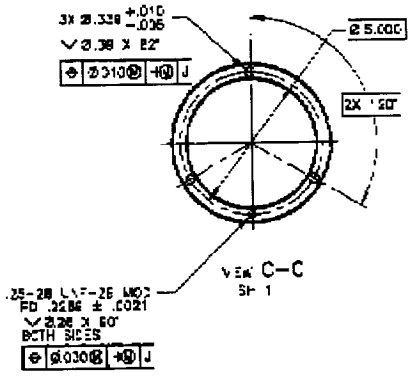

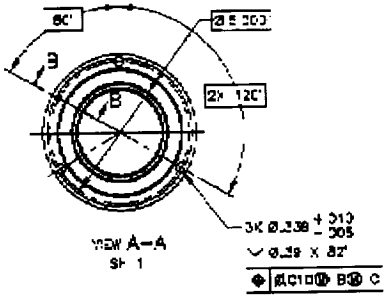

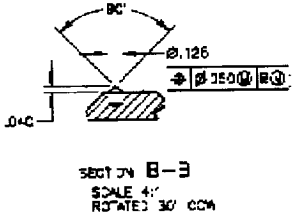

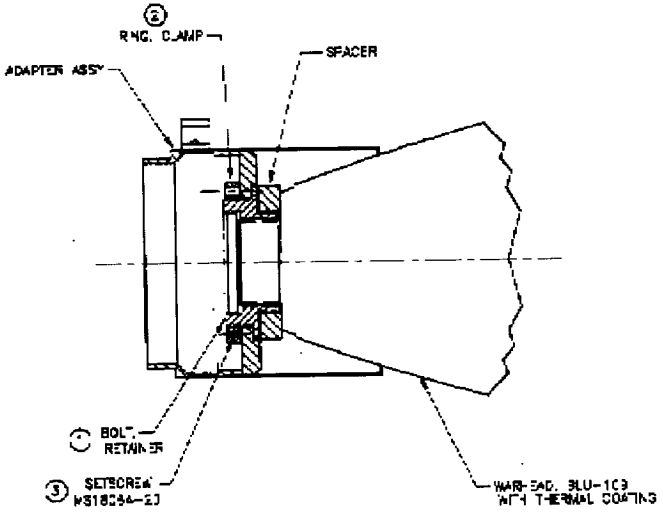

TABLE 1

ITEM	DESCRIPTION	TORQUE
1	BOLT, RETAINER	42.5 ± 2.5 FT-LB
2	RING, CLAMP	42.5 ± 2.5 FT-LB
3	SETSCREW	25 ± 5 IN-LB

ASSEMBLY VIEW

D 30003 1393AS189

NOTES:

1. DATUM A IS DEFINED AS THE AXIS THROUGH THE 3.000-15 UN-2A PITCH Ø AT THE FWD END, AND THE Ø4.500, DATUM B, ON THE AFT END OF THE BLU-109 BOMB BODY.
2. TORQUE SETSCREWS TO 250 ± 50 IN LB.
3. DATUM C IS DEFINED AS THE 2.750-15 UN-3B PITCH Ø OF THE BOMB BODY CHARGING WELL HOLE.

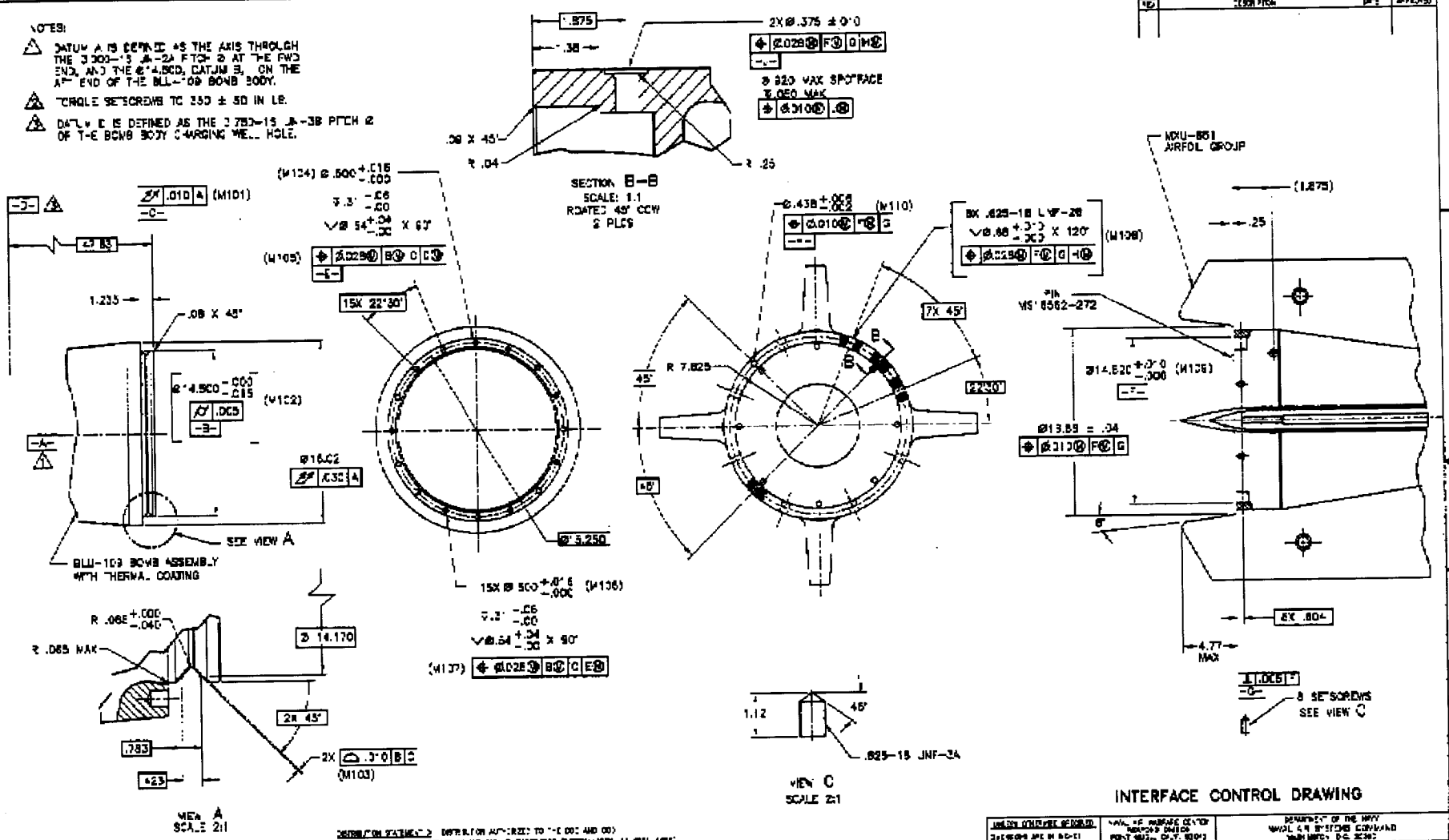

CLASSIFICATION OF CHARACTERISTICS (200-STD-2101)

CRITICAL - NONE

MAJOR - 10

MINOR - NONE

INTERFACE CONTROL DRAWING

INTERFACE, AIRFOIL GROUP TO WARHEAD (BLU-109)

D30003 1393AS190

1393AS190

NOTES

1. Ø Y FOR SPECIFIC VALUES SHALL BE PER TABLE 1. CONTOUR SHALL BLEND SMOOTHLY BETWEEN THOSE VALUES. RUNOUT OF Ø Y WITH RESPECT TO DATUM -A- SHALL NOT EXCEED .187

(N101) 2. TENS LISTED IN TABLE 2 SHALL BE TIGHTENED ACCORDING TO THE SCHEDULE SHOWN

TABLE 1

DOCUMENTATION	
X	Ø Y
.000 ±.031	4.750 = .777
5.347	6.231
5.360	6.963
5.364	7.878
5.862	8.745
6.781	9.675
7.870	9.962
10.937	9.962
13.003	11.848
15.670	11.214

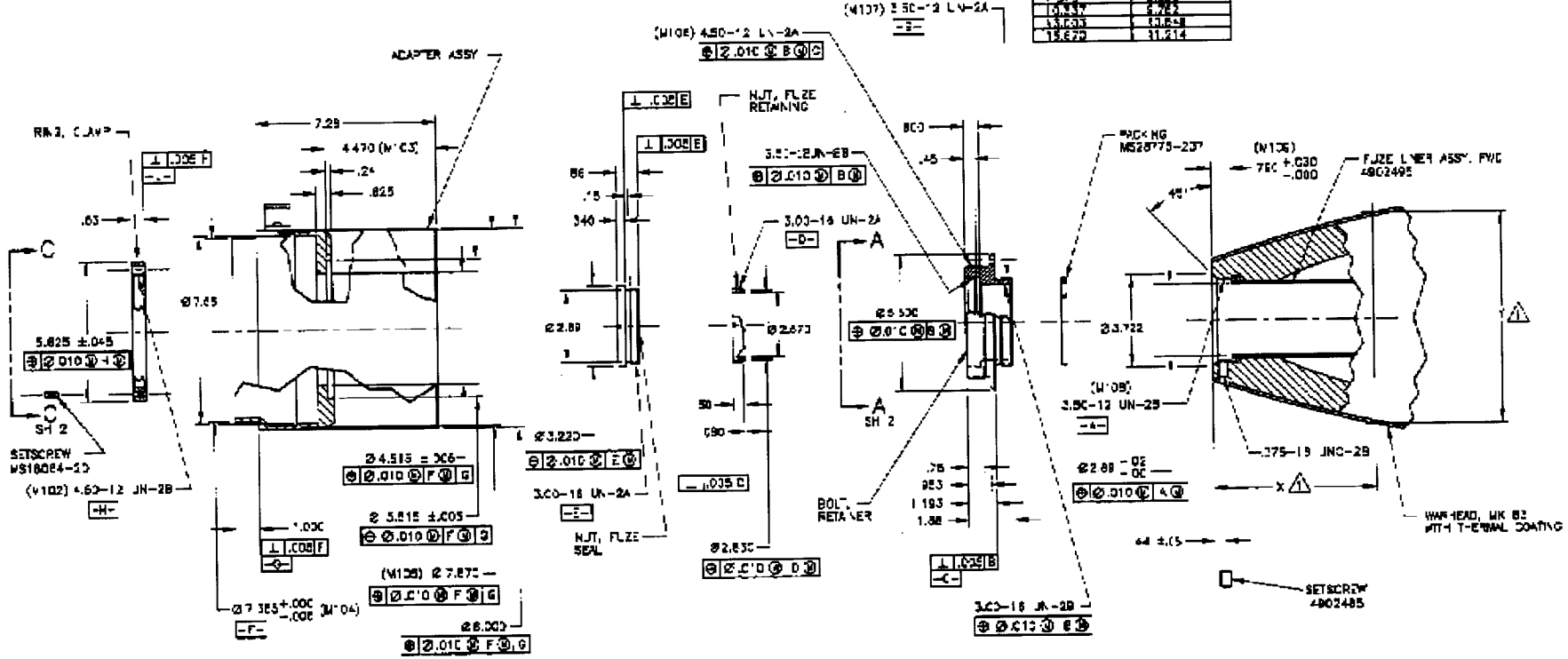

INTERFACE CONTROL DRAWING

CLASSIFICATION OF CHARACTERISTICS (DOD-STD-2101)

CRITICAL – NONE

MAJOR – 9

MINOR – NONE

DISTRIBUTION STATEMENT A: DISTRIBUTION AUTHORIZED TO THE DOD AND DOD CONTRACTORS ONLY (WARNING DATA OF THE NAVAL AIR SYSTEMS COMMAND). OTHER REQUESTS SHALL BE REFERRED TO NAVAL AIR WARFARE CENTER WEAPONS DIVISION, CODE 3.3.3.3.

WARNING – THIS DOCUMENT CONTAINS TECHNICAL DATA WHOSE EXPORT IS RESTRICTED BY THE ARMS EXPORT CONTROL ACT (TITLE 22, U.S.C., SEC 2751 ET SEQ) OR THE EXPORT ADMINISTRATION ACT OF 1979, AS AMENDED (TITLE 50, U.S.C. APP. 2401 ET SEQ). VIOLATIONS OF THESE EXPORT LAWS ARE SUBJECT TO SEVERE CRIMINAL PENALTIES. DISSEMINATE IN ACCORDANCE WITH PROVISIONS OF DOD DIRECTIVE 5230.25.

DISTRIBUTION NOTICE – PRIOR TO THE DATA IS NO LONGER NEEDED, DESTROY IT BY ANY MEANS WHICH WILL PREVENT DISCLOSURE OF CONTENTS OR RECONSTRUCTION OF THE DOCUMENT.

SHEET	SHEET	DOC ASSY	LISTED ON	LISTED ON
REVISION STATUS OF SHEETS		APPLICATION		

UNLESS OTHERWISE SPECIFIED
DIMENSIONS ARE IN INCHES TOLERANCES
WALL ± 1
ANGLES ± 1
XX ± 0.01
XXX ± 0.005
SURFACE ROUGHNESS 250

INTERPRET DRAWING IN ACCORDANCE WITH ANSI Y14.5M-1982

NAVAL AIR WARFARE CENTER WEAPONS DIVISION
CHINA LAKE, CALIFORNIA 93555-6001

DEPARTMENT OF THE NAVY
NAVAL AIR SYSTEMS COMMAND
WASHINGTON, D.C. 20360

INTERFACE, FORWARD ADAPTER ASSEMBLY TO WARHEAD (MK 83)

SIZE	CAGE CODE	DRAWING NO	REV
D	30003	1393AS181	–

SCALE 1/2 | SHEET 1 OF 2

DWG NO 1393AS181